Thermo Scientific

TriPlus 300 Headspace Sampling System

User Guide

P/N 317 09671 Revision C December 2015

Thermo SCIENTIFIC

© 2015 Thermo Fisher Scientific Inc. All rights reserved.

TriPlus 300 Headspace, TRACE 1300, TRACE 1310, ISQ Series, TSQ 8000, ITQ, and DSQ II are trademarks of Thermo Fisher Scientific Inc., and its subsidiaries.

Published by Thermo Fisher Scientific S.p.A., Strada Rivoltana 20090 Rodano-Milan, Italy
Tel: +39 02 95059303; Fax: +39 02 95059388

Thermo Fisher Scientific Inc. provides this document to its customers with a product purchase to use in the product operation. This document is copyright protected and any reproduction of the whole or any part of this document is strictly prohibited, except with the written authorization of Thermo Fisher Scientific Inc.

The contents of this document are subject to change without notice. All technical information in this document is for reference purposes only. System configurations and specifications in this document supersede all previous information received by the purchaser.

Thermo Fisher Scientific Inc. makes no representations that this document is complete, accurate or error-free and assumes no responsibility and will not be liable for any errors, omissions, damage or loss that might result from any use of this document, even if the information in the document is followed properly.

This document is not part of any sales contract between Thermo Fisher Scientific Inc. and a purchaser. This document shall in no way govern or modify any Terms and Conditions of Sale, which Terms and Conditions of Sale shall govern all conflicting information between the two documents.

Release history:

First edition, released April 2013 *"Original Instructions"*
Second edition, released March 2015; Third Edition, December 2015

For Research Use Only. Not for use in diagnostic procedures.

Thermo SCIENTIFIC

Part of Thermo Fisher Scientific

Reader's Survey

TriPlus 300 Headspace User Guide, PN 31709671, Third Edition

	Strongly Agree	Agree	Neutral	Disagree	Strongly Disagree
The manual is well organized.	1	2	3	4	5
The manual is clearly written.	1	2	3	4	5
The manual contains all the information I need.	1	2	3	4	5
The instructions are easy to follow.	1	2	3	4	5
The instructions are complete.	1	2	3	4	5
The technical information is easy to understand.	1	2	3	4	5
Examples of operation are clear and useful.	1	2	3	4	5
The figures are helpful.	1	2	3	4	5
I was able to operate the system using this manual.	1	2	3	4	5

fold

If not, please comment below. Attach additional sheets if necessary.

_____ _____
_____ _____
_____ _____
_____ _____
_____ _____
_____ _____
_____ _____
_____ _____

Customer Registration Card

Register now…and receive all the privileges associated with being a Thermo Fisher Scientific product user including customer support, application reports, and technical reports.

***MY ORGANIZATION IS:* (Check only one)**

- ❏ Commercial (for profit) lab
- ❏ Government lab
- ❏ Hospital/Clinic
- ❏ Industrial lab
- ❏ Research Institute
- ❏ University/College
- ❏ Veterinary
- ❏ Other_____

***MY PRIMARY APPLICATION IS:* (Check only one)**

- ❏ Analytical
- ❏ Biomedical
- ❏ Clinical/Toxicology
- ❏ Energy
- ❏ Environmental
- ❏ Food/Agricultural
- ❏ Forensic/Toxicology
- ❏ Pharmaceutical
- ❏ Research/Education
- ❏ Other_____

***MY PRIMARY JOB FUNCTION IS*: (Check only one)**

fold

- ❏ Administration
- ❏ Lab management
- ❏ Operator
- ❏ Other_____

Name _____ Title _____
Company _____ _____
Address _____ _____
City/State _____ Postal Code _____
Country _____ _____
Telephone _____ Ext. _____
Serial Number _____ Date purchased _____

Fold and mail or e-mail to:

Editor, Technical Publications
Thermo Fisher Scientific S.p.A.
Strada Rivoltana km 4
20090 Rodano (MI)
Italy

Editor, Technical Publications
Thermo Fisher Scientific CMD GC-GC/MS
2215 Grand Avenue Parkway
Austin TX 78728-3812
Unites States of America

Declaration

Manufacturer: **Thermo Fisher Scientific**

Thermo Fisher Scientific is the manufacturer of the instrument described in this manual and, as such, is responsible for the instrument safety, reliability and performance only if:

- installation
- re-calibration
- changes and repairs

have been carried out by authorized personnel and if:

- the local installation complies with local law regulations
- the instrument is used according to the instructions provided and if its operation is only entrusted to qualified trained personnel

Thermo Fisher Scientific is not liable for any damages derived from the non-compliance with the aforementioned recommendations.

Thermo Fisher Scientific S.p.A.
Strada Rivoltana, 20090 Rodano - Milan - Italy — Tel: +39 02 950591 - Fax: +39 02 9505276

Regulatory Compliance

Thermo Fisher Scientific performs complete testing and evaluation of its products to ensure full compliance with applicable domestic and international regulations.

Thermo Fisher Scientific declares, under sole responsibility, that the product as originally delivered complies with the requirements of the following applicable European Directives and carries the CE marking accordingly:

Low Voltage Directive:2006/95/EC

- EMC Directive:2004/108/EC

… and conforms with the following product standards:

Safety

This device complies with>

- EN 61010-1:2001 2nd Edition
- IEC 61010-1:2001 2nd Edition
- CAN/CSA –c22.2 No. 61010.1–04
- UL Std. No 61010-1 2nd Edition

Electromagnetic Compatibility

This device complies with:

- EN 61326-1:2006, EN 55011: 2009, Class A Group 1
- IEC 61326-1:2005, CISPR 11:2009, Class A Group 1

FCC Compliance Statement

Thermo Fisher Scientific hereby declares that our product has been tested and complies with the requirements of Title 47 Telecommunication FCC Part 15 (2007), Class A Digital Device.

THIS DEVICE COMPLIES WITH PART 15 OF THE FCC RULES. OPERATION IS SUBJECT TO THE FOLLOWING TWO CONDITIONS: (1) THIS DEVICE MAY NOT CAUSE HARMFUL INTERFERENCE, AND (2) THIS DEVICE MUST ACCEPT ANY INTERFERENCE RECEIVED, INCLUDING INTERFERENCE THAT MAY CAUSE UNDESIRED OPERATION.

CAUTION Read and understand the various precautionary notes, signs, and symbols contained inside this manual pertaining to the safe use and operation of this product before using the device.

Notice on Lifting and Handling of Thermo Scientific Instruments

For your safety, and in compliance with international regulations, the physical handling of this Thermo Fisher Scientific instrument ***requires a team effort*** to lift and/or move the instrument. This instrument is too heavy and/or bulky for one person alone to handle safely.

Notice on the Proper Use of Thermo Scientific Instruments

In compliance with international regulations: Use of this instrument in a manner not specified by Thermo Fisher Scientific could impair any protection provided by the instrument.

Notice on the Susceptibility to Electromagnetic Transmissions

Do not use radio frequency transmitters, such as mobile phones, in close proximity to the instrument.

WEEE Compliance

This product is required to comply with the European Union's Waste Electrical & Electronic Equipment (WEEE) Directive 2012/19/EU. It is marked with the following symbol:

Thermo Fisher Scientific has contracted with one or more recycling or disposal companies in each European Union (EU) Member State, and these companies should dispose of or recycle this product. See www.thermoscientific.com/rohsweee for further information on Thermo Fisher Scientific's compliance with these Directives and the recyclers in your country.

WEEE Konformität

Dieses Produkt muss die EU Waste Electrical & Electronic Equipment (WEEE) Richtlinie 2012/19/EU erfüllen. Das Produkt ist durch folgendes Symbol gekennzeichnet:

Thermo Fisher Scientific hat Vereinbarungen mit Verwertungs-/Entsorgungsfirmen in allen EU-Mitgliedsstaaten getroffen, damit dieses Produkt durch diese Firmen wiederverwertet oder entsorgt werden kann. Mehr Information über die Einhaltung dieser Anweisungen durch Thermo Fisher Scientific, über die Verwerter, und weitere Hinweise, die nützlich sind, um die Produkte zu identifizieren, die unter diese RoHS Anweisung fallen, finden sie unter www.thermoscientific.com/rohsweee.

Conformité DEEE

Ce produit doit être conforme à la directive européenne (2012/19/EU) des Déchets d'Equipements Electriques et Electroniques (DEEE). Il est marqué par le symbole suivant:

Thermo Fisher Scientific s'est associé avec une ou plusieurs compagnies de recyclage dans chaque état membre de l'union européenne et ce produit devrait être collecté ou recyclé par celles-ci. Davantage d'informations sur la conformité de Thermo Fisher Scientific à ces directives, les recycleurs dans votre pays et les informations sur les produits Thermo Fisher Scientific qui peuvent aider la détection des substances sujettes à la directive RoHS sont disponibles sur www.thermoscientific.com/rohsweee.

Conformità RAEE

Questo prodotto è marcato con il seguente simbolo in conformità alla direttiva europea 2012/19/EU (RAEE) sui rifiuti di apparecchiature elettriche ed elettroniche:

Thermo Fisher Scientific si è accordata con una o più società di riciclaggio in ciascun Stato Membro della Unione Europea (EU), e queste società dovranno smaltire o riciclare questo prodotto. Per maggiori informazioni vedere il sito www.thermoscientific.com/rohsweee.

Conformidad RAEE

Este producto es marcado con el siguiente símbolo en conformidad a la Directiva 2012/19/EU de la Unión Europea sobre los residuos de aparatos eléctricos y electrónicos:

Thermo Fisher Scientific ha contratado una o más empresas de reciclo para tratar residuos en cada Estado Miembro de la Unión Europea, y estas empresas deberían reciclar o eliminar este producto. Referirse a www.thermoscientific.com/rohsweee para una mayor información sobre la conformidad de Thermo Fisher Scientific con estas Directivas y para las empresas de reciclaje en su país.

IMPORTANT

The symbol indicates the product must not be disposed of with the normal household wastes. Correct disposal of this product prevents any potentially negative impact on the environmental and human health that could arise from any inappropriate handling of the product itself.

WEEE and RoHS rules, while laid down at European level, are put into national law at national level. When exporting to Europe, it is essential to comply with national law in each relevant country. The EU law simply serves as a template for national laws, which may differ considerably.

Each EU Member State has own regulations regarding the application of these directives. Please refer to the regulations in force in your country.

C

Contents

Preface . . . . . **xiii**
About Your System xiv
Power Rating xiv
Contacting Us xiv
Related Documentation xiv
Safety Alerts and Important Information xv
Special Notices xv
Safety Symbols and Signal Words xv
Instrument Markings and Symbols xvii
Safety Information and Warnings xviii
General Considerations xviii
Electrical Hazards xix
Other Hazards xx
Working with Toxic or other Harmful Compounds xxi
Biological Hazard Warning Note xxii
Maintenance xxii
Disposal xxiii

Chapter 1 Getting Familiar with Your TriPlus 300 Headspace Sampling System **1**
Introduction 2
Definition of Terms 2
The TriPlus 300 Headspace Sampling System 3
Main Unit 3
Oven 5
Sampling System 5
Pneumatic Interface 6
Electrical Interface 7
Touch screen 8
Autosampler Unit 9
Pneumatics 11

Analytical Cycle 12
Standby 12
Equilibration 13
Pressurization 13
Loop Fill 14
Injection 15
Vial Venting 16
Purging 17
Installation Notes 18
Who Performs the Installation 18
Standard Outfit 18
Electrical Requirements 18
Environmental Conditions 18
Lift and Place the TriPlus 300 Headspace Sampling System 19
Assembling the TriPlus 300 Headspace Sampling System 19
Pneumatic Supply 19
Plumbing the Connection to Gas Chromatograph 20
Making the Electrical Connections 22
Making the Power Connections 23
Powering On the TriPlus 300 Headspace 23
Setting the Communications 24
Leak Test 27
Usage Notes 27
Temperatures 28
Carrier Gas Optimization 28
Auxiliary Gas Pressure Optimization 29
Equilibration Time Conditioning 29
Shaking Conditioning 29
Sample Vials Size 29
Missing and Wrong Size Vials 30
Sample Vial Septa 30
Vial Closure 30
Matrix Effects 31

Chapter 2 TriPlus 300 Headspace User Interface 33
TriPlus 300 Headspace User Interface Overview 34
Status Bar 36
Menu 36
Status 37
Time Clock and Date 40
Desktop 41
Tool Bar 42

Device Status and Ready Conditions 43
Temperature Tab 44
Press/Flow Tab 45
Instrument Status 45

Chapter 3 Operation 47
Control of Analysis 48
Start of analysis 48
End of analysis 48
Cycle 49
Temperature 51
Equilibration 52
Pressurization 53
Loop Fill 54
Injection 54
Others 56
Summary 57
Method 59
Sequence 61
Creating a Sequence 62
Changing Method Parameters During Run 63
Changing Sequence Parameters During Run 64
Priority Sequence 64
Sequence Interrupted 65
Changing Autosampler Parameters During a Run 65
Timed Events 66
Clock Time Events 66
Method Actions 69
Available Actions 70
Method Developing Optimization (MDO) 72
MDO Parameters 72
Options 73
Gases Tab 74
Com Tab 74
Others Tab 76
Gas & Energy Saving Tab 77
Setup 77
AS Tab 79
Remote Tab 79
Others Tab 80
Carrier Tab 80

Chapter 4 Maintenance, Parts Replacement, and Diagnostic 81
Maintenance 82
Load/Unload Tab 83
Temperature Tab 83
Valves Tab. 84
Gases Tab 84
Movements Tab 85
FW Update Tab 85
Calibration 86
Touch Screen Calibration 87
Diagnostic. 88
Hardware 88
Alarms. 89
Lock/Unlock Page. 92
External Cleaning of the TriPlus 300 Headspace Instrument 93
Replacing the Transfer Line Needle 93
Replacing the Sampling Needle 94
Handling Precautions 94
Installing the HS Adapter Kit on the SSL/SSLBKF Injector 95

Chapter 5 Upgrade Equipment. 105
Chiller. 105
Barcode Reader 107
About the Barcode Reader. 107
Barcode Reader Description 108
User Information 108
Label Positioning 109

P

Preface

This manual describes the features and the components of the TriPlus 300 Headspace sampling system. Inside, you will find all the informations necessary for the routine operations of your sampling system. This includes operating procedures, sample injection techniques, diagrams, and the description of the major components.

This User Guide is intended for frequent or new TriPlus 300 Headspace sampling system users who are experienced at using automated systems to run existing analytical methods.

Note The TriPlus 300 Headspace sampling system must be installed and set up properly before the Operating Instructions can be used.

This manual is organized as follows:

- Chapter 1, "Getting Familiar with Your TriPlus 300 Headspace Sampling System," provides informations to familiarize you with the TriPlus 300 Headspace sampling system.
- Chapter 2, "TriPlus 300 Headspace User Interface," describes the user interface of your TriPlus 300 Headspace sampling system.
- Chapter 3, "Operation," provides the instructions for operating with your TriPlus 300 Headspace sampling system.
- Chapter 4, "Maintenance, Parts Replacement, and Diagnostic," provides instructions for maintaining your TriPlus 300 Headspace sampling system.
- Chapter 5, "Upgrade Equipment," describes how to install the upgraded equipment that is available for the TriPlus 300 Headspace sampling system.

About Your System

Thermo Fisher Scientific systems operate safely and reliably under carefully controlled environmental conditions. If the equipment is used in a manner not specified by the manufacturer, the protections provided by the equipment might be impaired. If you maintain a system outside the specifications listed in this guide, failures of many types, including personal injury or death, might occur. The repair of instrument failures caused by operation in a manner not specified by the manufacturer is specifically excluded from the Standard Warranty and service contract coverage.

Power Rating

Main Unit

- 100-120/200-240 Vac ±10% max; 60 Hz; 1300 VA.
- 100-115/200-230 Vac ±10% max; 50 Hz; 1300 VA.

Autosampler Unit

- 24 Vdc through a portable external power supply

  Electrical characteristics of the supply

  – input 85-264 Vac; 47/63 Hz

  – output 12 Vdc; 24 VA

Detailed instrument specifications are in the Product Specification or Product Brochure.

Contacting Us

Thermo Fisher Scientific provides comprehensive technical assistance worldwide and is dedicated to the quality of our customer relationships and services.

Use http://www.thermoscientific.com address for products information.address for products information.

Use http://www.gc-gcms-customersupport.com/WebPage/Share/Default.aspx address to contact your local Thermo Fisher Scientific office, or affiliate GC-GC/MS Customer Support.

Related Documentation

In addition to this guide, Thermo Scientific provides the following documents for the TriPlus 300 Headspace sampling system.

- *TriPlus 300 Headspace Preinstallation Requirements Guide*, PN 31709672
- *TriPlus 300 Headspace User Guide*, PN 31709671

To suggest ways we can improve the documentation, follow this link to complete our documentation survey.

Safety Alerts and Important Information

Make sure you follow the precautionary notices presented in this manual. The safety and other special notices appear in boxes.

Special Notices

Notices includes the following:

IMPORTANT Highlights information necessary to prevent damage to software, loss of data, or invalid test results; or might contain information that is critical for optimal performance of the system.

Note Emphasizes important information about a task.

Tip Helpful information that can make a task easier.

Safety Symbols and Signal Words

All safety symbols are followed by **WARNING** or **CAUTION**, which indicates the degree of risk for personal injury, instrument damage, or both. Cautions and warnings are following by a descriptor, such as **BURN HAZARD**. A **WARNING** is intended to prevent improper actions that could cause personal injury. Whereas, a **CAUTION** is intended to prevent improper actions that might cause personal injury, instrument damage, or both. You can find the following safety symbols on your instrument, or in this guide:

Symbol	Descriptor
	BIOHAZARD: Indicates that a biohazard *will*, *could*, or *might* occur.
	BURN HAZARD: Alerts you to the presence of a hot surface that *could* or *might* cause burn injuries.
	ELECTRICAL SHOCK HAZARD: Indicates that an electrical shock *could* or *might* occur.

	FIRE HAZARD: Indicates a risk of fire or flammability *could* or *might* occur.
	EXPLOSION HAZARD. Indicates an explosion hazard. This symbol indicates this risk *could* or *might* cause physical injury.
	FLAMMABLE GAS HAZARD. Alerts you to gases that are compressed, liquefied or dissolved under pressure and can ignite on contact with an ignition source. This symbol indicates this risk *could* or *might* cause physical injury.
	GLOVES REQUIRED: Indicates that you must wear gloves when performing a task or physical injury *could* or *might* occur.
	CLOTHING REQUIRED. Indicates that you should wear a work clothing when performing a task or else physical injury *could* or *might* occur.
	BOOTS REQUIRED. Indicates that you must wear boots when performing a task or else physical injury *could* or *might* occur.
	MATERIAL AND EYE HAZARD. Indicates you must wear eye protection when performing a task.
	HAND AND CHEMICAL HAZARD: Indicates that chemical damage or physical injury *could* or *might* occur.
	HARMFUL. Indicates that the presence of harmful material *will, could, or might* occur.
	INSTRUMENT DAMAGE: Indicates that damage to the instrument or component *might* occur. This damage might not be covered under the standard warranty.
	LIFTING HAZARD. Indicates that a physical injury *could* or *might* occur if two or more people do not lift an object.
	MATERIAL AND EYE HAZARD: Indicates that eye damage *could* or *might* occur.
	READ MANUAL: Alerts you to carefully read your instrument's documentation to ensure your safety and the instrument's operational ability. Failing to carefully read the documentation *could* or *might* put you at risk for a physical injury.
	TOXIC SUBSTANCES HAZARD: Indicates that exposure to a toxic substance could occur and that exposure *could* or *might* cause personal injury or death.
	LASER HAZARD. Indicates that exposure to a laser beam *will*, *could*, or *might* cause personal injury.

	RADIOACTIVE HAZARD. Indicates that the presence of radioactive material *could or might* occur.
	For the prevention of personal injury, this general warning symbol precedes the **WARNING** safety alert word and meets the ISO 3864-2 standard. In the vocabulary of ANSI Z535 signs, this symbol indicates a possible personal injury hazard exists if the instrument is improperly used or if unsafe actions occur. This symbol and another appropriate safety symbol alerts you to an imminent or potential hazard that *could cause personal injury.*

Instrument Markings and Symbols

Table 1 explains the symbols used on Thermo Fisher Scientific instruments. Only a few of them are used on the TriPlus 300 Headspace sampling system. See the asterisk.

Table 1. Instrument Marking and Symbols (Sheet 1 of 2)

	Symbol	Description
		Direct Current
*		Alternating Current
		Both direct and alternating current
		Three-phase alternating current
		Earth (ground) terminal
		Protective conductor terminal
		Frame or chassis terminal
		Equipotentiality
*		On (Supply)
*		Off (Supply)
		Equipment protected throughout by DOUBLE INSULATION or REINFORCED INSULATION (Equivalent to Class II of IEC 536)
		Fuse
*		Jack socket

Table 1. Instrument Marking and Symbols (Sheet 2 of 2)

	Symbol	Description
*		Instruction manual symbol affixed to product. Indicates that the you must refer to the manual for specific **WARNING** or **CAUTION** information to avoid personal injury or damage to the product.
		Caution, risk of electric shock
*		Caution, hot surface
*		Caution, biohazard
*		Caution, Laser beam
*		Symbol in compliance to the Directive 2012/19/EU on Waste Electrical and Electronic Equipment (WEEE) placed on the European market after August, 13, 2005.

Safety Information and Warnings

The purpose of this safety guide is to make users aware of potential safety issues and general concerns for Thermo Fisher Scientific representatives during installation, and repair of the TriPlus 300 Headspace sampling system, or parts of it (following the life-cycle principle), as well as for the end user TriPlus 300 Headspace sampling system in the lab during the learning phase and in routine work.

IMPORTANT Read this section first before operating the TriPlus 300 Headspace sampling system.

General Considerations

- Before using your system, consult the *TriPlus 300 Headspace User Guide* and related documents under all circumstances.
- Changes or modifications to this unit not expressly approved by the party responsible for compliance, could void your's authority to operate the equipment.
- Be aware that if the equipment is used in a manner not specified by the manufacturer, the protective and safety features of the equipment might be impaired.
- The repair of instrument failures caused by operation in a manner not specified by the manufacturer is expressly excluded from the standard warranty and service contract coverage.

- When for technical reasons it is necessary to work on instrument parts which might involve a potential hazard (moving parts, components under voltage, and others) contact Thermo Fisher Scientific authorized representative. In general, this type of situation arises when access to the parts is only possible using a tool. When you perform a maintenance operation, you must have received proper training to carry out that specific task.

Electrical Hazards

Every analytical instrument has specific hazards. Be sure to read and comply with the following pre-cautions. They ensure the safe and long-term use of your TriPlus 300 Headspace sampling system. The installation over-voltage category is Level II. The Level II category pertains to equipment receiving its electrical power locally, such as from an electrical wall outlet.
Connect the TriPlus 300 Headspace sampling system only to instruments complying with IEC 61010 safety regulations.

The power line and the connections between the TriPlus 300 Headspace sampling system and other instruments, used in the configuration setup of the total analytical system, must maintain good electrical grounding.

Poor grounding represents a danger to the operator, and might seriously affect the performance of the instrument.

Do not connect the TriPlus 300 Headspace sampling system to power lines that supply devices of a heavy duty nature, such as motors, refrigerators, and other devices that can generate electrical disturbances.

Use only fuses of the type and current rating specified. Do not use repaired fuses, and do not short-circuit the fuse holder. The supplied power cord must be inserted into a power outlet with a protective earth (ground) contact.
When using an extension cord, ensure that the cord also has an earth contact.

If the supplied power cord does not fit the local electrical socket and a replacement or adapter must be purchased locally, ensure that only a certified power cord is used. Any power cord used must be certified by the appropriate local authorities.

Pay attention not to leave any cables connecting the TriPlus 300 Headspace sampling system and the chromatographic system, or the power cord close to heated zone, such as the injector or detector heating blocks, or the GC hot air vents.

Always replace any cable showing signs of damage with another one provided by the manufacturer. Safety regulations must be respected.

Do not change the external or internal grounding connections. Tampering with or disconnecting these connections could endanger you and damage the TriPlus 300 Headspace sampling system. The instrument is properly grounded in accordance with these regulations when shipped. To ensure safe operation, do not make any changes to the electrical connections or the instrument's chassis.

Do not turn the instrument on if you suspect that it has incurred any type of electrical damage. Instead, disconnect the power cord and contact a Thermo Fisher Scientific representative for a product evaluation. Do not attempt to use the instrument until it has been evaluated. Electrical damage might have occurred if the TriPlus 300 Headspace sampling system shows visible signs of damage, exposure to any liquids or has been transported under severe stress.

Damage can also result if the instrument is stored for prolonged periods under unfavorable conditions: for example, subjected to heat, moisture, and so on. Ensure that the power supply/controller unit is always placed in a clean and dry position. Avoid any liquid spills in the vicinity.

Before attempting any type of maintenance work, always disconnect the power cords from the power supply if optional devices are installed. Capacitors inside the instrument might still be charged if the instrument is turned off.
To avoid damaging electrical parts, do not disconnect an electrical assembly while power is supplied to the TriPlus 300 Headspace sampling system. After the power is turned off, wait approximately 30 seconds before you disconnect an assembly.

The instrument includes a number of integrated circuits. These circuits might be damaged if exposed to excessive line voltage fluctuations, power surges or electrostatic charges, or both.

Never try to repair or replace any components of the instrument without the assistance of a Thermo Fisher Scientific representative. There are no operator-serviceable or replaceable parts inside the TriPlus 300 Headspace sampling system. If a instrument is not functioning, contact a Thermo Fisher Scientific representative.

The power supplies for the TriPlus 300 Headspace sampling system have the symbols **I/O** to indicate ON/OFF. It is important that the power ON/OFF switch is accessible and easy to operate, and where it is possible to unplug the AC power cord from the power supply/wall outlet in case of emergency.

Other Hazards

There is danger of crushing to fingers and hands. To avoid injury keep your hands away from moving parts during operation.
Turn off the power to the TriPlus 300 Headspace sampling system if you must reach inside a mechanically powered system with moving parts.

To avoid injury, observe safe laboratory practice when handling solvents, changing tubing, or operating the TriPlus 300 Headspace sampling system. Know the physical and chemical properties of the solvents you use.
See the MSDS (Material Safety Data Sheets) from the manufacturer of the solvents being used.

When using the TriPlus 300 Headspace sampling system, follow the generally accepted procedures for quality control and method development.

When using the TriPlus 300 Headspace sampling system in the field of chromatographic analysis, if a change is observed in the retention time of a particular compound, in the resolution between two compounds, or in the peak shape, immediately determine the reasons for the changes. Do not rely on the separation results until you determine the cause of a change.

Do not operate on the instrument components that form part of the work area of the TriPlus 300 Headspace sampling system when it is in motion.

Do not use vials without a sealing cap. Vapor phase from organic solvents can be hazardous and flammable. Acidic vapor phase can cause corrosion to critical mechanical parts.

When sample vials have to undergo heating and agitation, it is important to consider the glass quality. Use high quality glass only. Remember that depending on the application conditions, high pressure can build up in the vial. Whenever a temperature greater than 60 °C is applied, consider the vapor pressure of the solvent used to ensure that no excessive pressure builds up.

This is important when using temperatures above 100°C and especially at the maximum temperature of 300 °C. Be aware that solid materials can also contain volatile compounds such as water (humidity) that may cause build-up of excess vapor pressure.

Do not reuse headspace vials. During the process of washing the vial, micro-cracks can form which will weaken the glass wall and increase the chances of the vial breaking.

Working with Toxic or other Harmful Compounds

WARNING Before using hazardous substances (toxic, harmful, and so on), please read the hazard indications and information reported in the applicable Material Safety Data Sheet (MSDS). Use personal protective equipment according to the safety requirements.

The TriPlus 300 Headspace sampling system requires the use of several chemical products with different hazard characteristics, which are present in vials and syringes. Before using these substances or replacing the syringe, please read the hazard indications and information reported in the MSDS supplied by the manufacturer referring to the relevant CAS number.

When preparing the samples, please refer to local regulations for the ventilation conditions of the work room.

All waste materials must be collected and eliminated in compliance with the local regulations and directives in the country where the instrument is used.

Biological Hazard Warning Note

In laboratories where samples with potential biological hazards are handled, the user must label any equipment or parts which might become contaminated with biohazardous material.

The appropriate warning labels are included with the shipment of the instrument. It is the user's responsibility to label the relevant parts of the equipment.

When working with biohazardous materials, you are responsible for fulfilling the following mandatory requirements:

- Providing instructions on how to safely handle biohazardous material.
- Training operators to be aware of potential hazards.
- Providing personal protective equipment.
- Providing instructions for what to do if operators are exposed to aerosols or vapors during normal operation (within the intended use of the equipment) or in case of single fault situations such as a broken vial. The protective measures must consider potential contact with the skin, mouth, nose (respiratory organs), and eyes.
- Providing instructions for decontamination and safe disposal of relevant parts.

Maintenance

Any external cleaning or maintenance must be performed with the TriPlus 300 Headspace sampling system turned off and the power cord disconnected. Avoid using solvents and sprays on electrical parts. For removal of potentially dangerous substances (toxic, harmful, and others) read the hazard indications and information reported in the MSDS (Material Safety Data Sheet) supplied by the manufacturer referring to the relevant CAS (Chemical Abstract Service) number. Use proper protective gloves.

When working with hazardous materials such as radioactive, biologically hazardous material, and so on, it is important to train all operators how to respond in case of spills or contamination.

Depending on the class of hazardous material, the appropriate measure have to be taken immediately. Therefore, the chemicals or solvents needed for decontamination must be on hand.

Any parts of the equipment which can potentially be contaminated, such as the sample vial rack, syringe tool, wash module, and others, must be cleaned regularly. The waste solvent from cleaning and any hardware that must be disposed must be properly eliminated with all the necessary precautions, abiding by national and international regulations.

When preparing for decontamination, ensure that the solvent or chemical to be used will not damage or react with the surface, or dye (color) of the instrument, table or other nearby objects. If in doubt, please contact your Thermo Fisher Scientific representative to verify the compatibility of the type or composition of solvents with the TriPlus 300 Headspace sampling system.

Disposal

Do not dispose of this equipment or parts thereof unsorted in municipal waste. Follow local municipal waste regulations for proper disposal provisions to reduce the environmental impact of waste electrical and electronic equipment (WEEE).

European Union customers: Call your local customer service representative responsible for the TriPlus 300 Headspace sampling system for complimentary equipment pick-up and recycling.

WARNING The customer must ensure that the TriPlus 300 Headspace sampling system has not been contaminated by any hazardous chemical or biological compounds including (but not limited to) bacteria or viruses.

Any part which had direct contact with the analytical sample must be identified and must undergo the appropriate decontamination procedure prior to shipping for disposal.

The customer and the service engineer are fully responsible for enforcing these requirements. Thermo Fisher Scientific will hold the representative, customer, or both responsible, if these regulations are not observed.

1

Getting Familiar with Your TriPlus 300 Headspace Sampling System

This chapter provides informations to familiarize with the TriPlus 300 Headspace sampling system.

Contents

- Introduction
- Definition of Terms
- The TriPlus 300 Headspace Sampling System
- Main Unit
- Autosampler Unit
- Pneumatics
- Analytical Cycle
- Installation Notes
- Usage Notes

Introduction

The TriPlus 300 Headspace sampling system is an automatic sampler for headspace gas chromatographic analysis in order to determine the concentration of volatile compounds in a liquid or solid matrices. The TriPlus 300 Headspace sampling system is able to automatically sample up to 120 samples (60 with the optional sample tray).

In the headspace technique the samples are placed in tightly closed vials.
Each vial is heated, and the volatile compounds are transferred from the solid or liquid sample into the gaseous phase above it, the so-called **headspace**, until a condition of thermodynamic equilibrium is reached.

Afterwards, an aliquot of headspace is withdrawn and injected into the gas chromatograph. The trend of a volatile compound to transfer into the headspace is expressed by the partition coefficient **K**. The coefficient depends on the compound solubility in the matrix, and it is strongly affected by the temperature and the composition of the matrix itself.

The TriPlus 300 Headspace sampling system automatically performs all the analytical phases from the equilibration to sampling and transfer to the GC with high repeatability.

The analytical times are optimized according to the set parameters, such as equilibration time and analytical time, in order to fully exploit the instrument's capability.

Besides a sampling technique, the headspace technique is also an extraction and concentration technique. It offers the advantages of a reduced manipulation of the sample, a higher sensitivity than the direct injection, and a longer lifetime of chromatographic columns since only the volatile fraction is injected into the column.

It can be easily connected and synchronized to any gas chromatograph for an automatic and reliable management of the entire analytical system.

Definition of Terms

This section defines the terms used in this guide:

- **TriPlus 300 Headspace** — The brand name for the entire sampling system product family. The product family includes the Main Unit and the Autosampler Unit.
- **Main Unit** — Term referring to the part of the TriPlus 300 Headspace sampling system that includes oven, sampling system, and interfaces.
- **Autosampler** — Term referring to the **Autosampler Unit** of the TriPlus 300 Headspace sampling system.

The TriPlus 300 Headspace Sampling System

The TriPlus 300 Headspace sampling system consists of two parts: **Main Unit** and **Autosampler Unit**. See Figure 1.

Figure 1. TriPlus 300 Headspace Sampling System

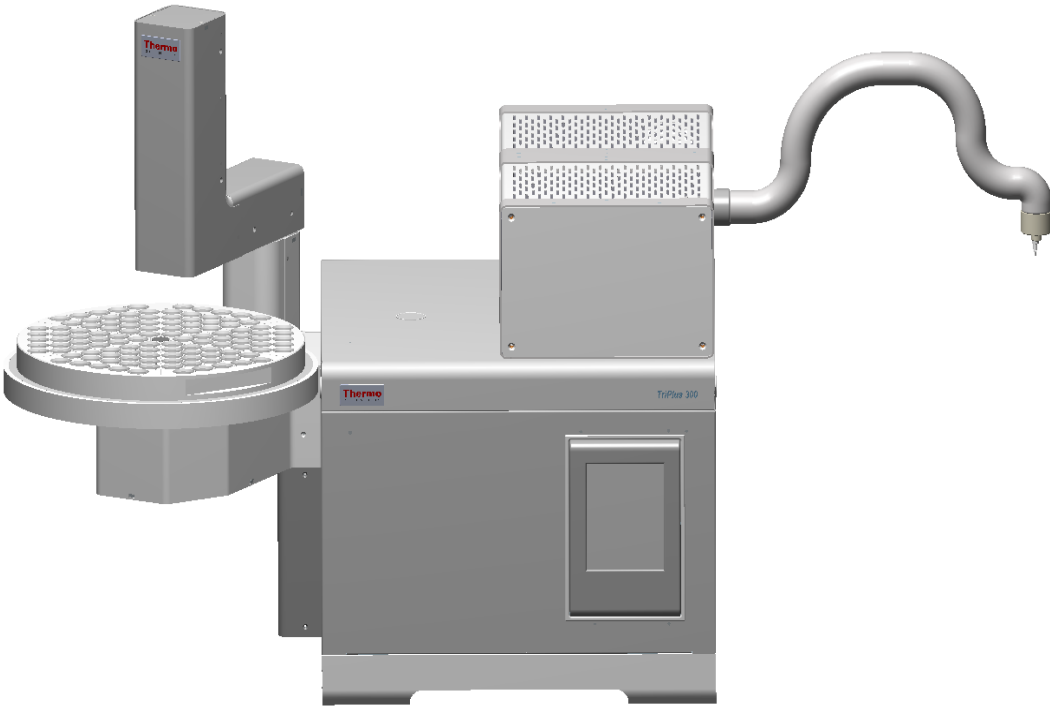

Autosampler Unit Main Unit

See the related topics:

- "Main Unit" on page 3
- "Autosampler Unit" on page 9

Main Unit

The the Main Unit includes the following components: **oven**, **sampling system**, **pneumatic interface**, **electrical interface**, and **touch screen**. See Figure 2.

CAUTION The oven is located inside the Main Unit and can accessible by opening the top cover of the Main Unit through the two lateral push-buttons.

Open the top cover ONLY if necessary for maintenance or service.

Figure 2. Main Unit: Front and Back View

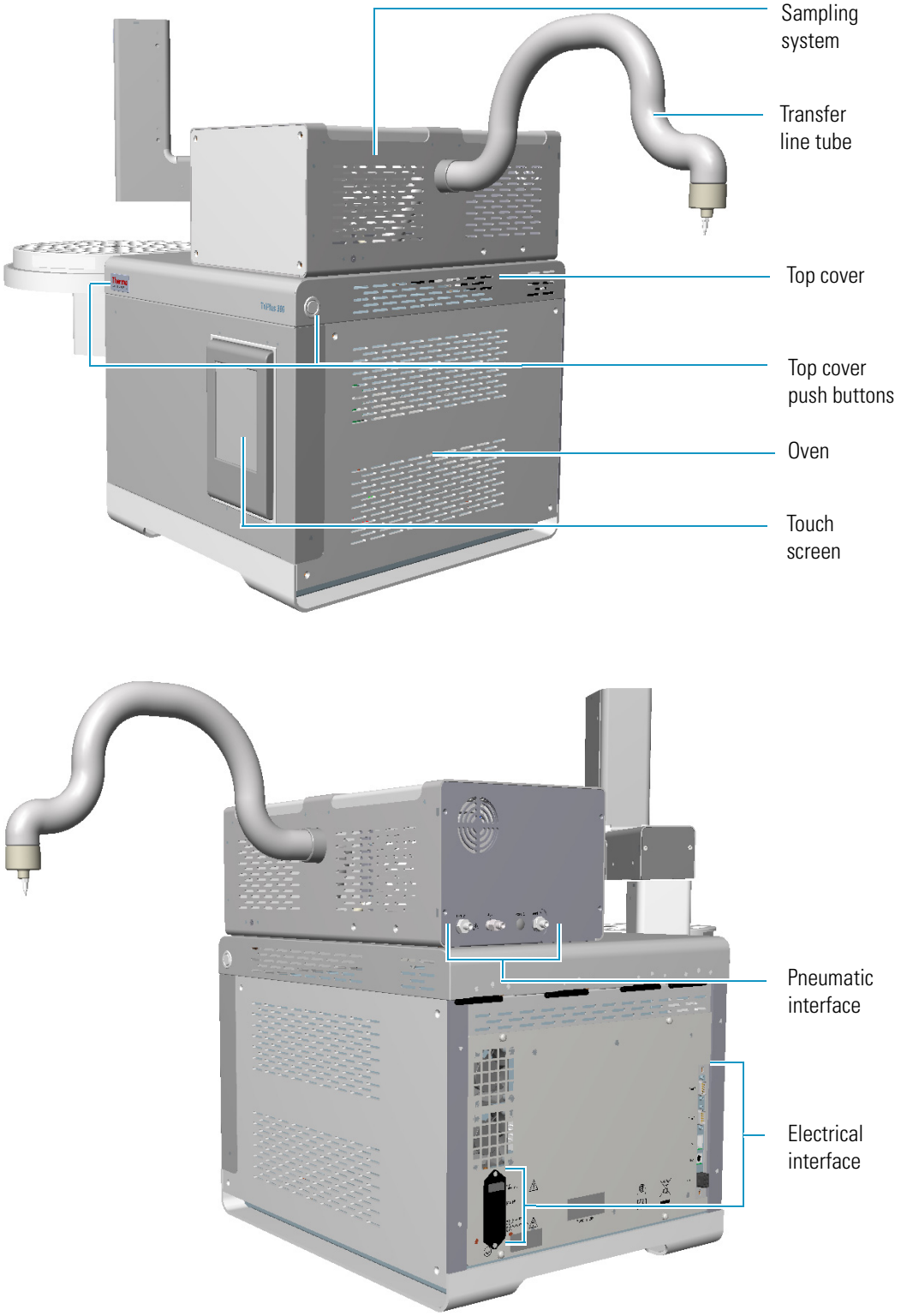

See the related topics:

- "Oven" on page 5
- "Sampling System" on page 5
- "Pneumatic Interface" on page 6
- "Electrical Interface" on page 7
- "Touch screen" on page 8

Oven

The oven contains an 18-seat rotating carousel for the vial housing and equilibration. See Figure 3.

Figure 3. Oven and Carousel

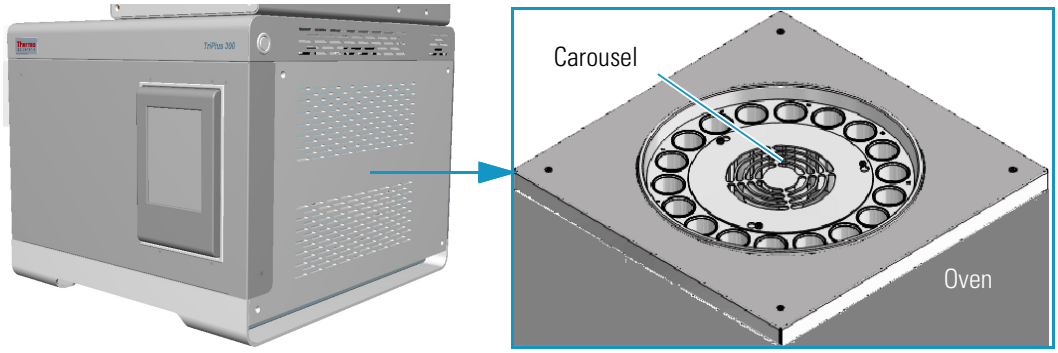

A circular resistance heats up the oven from ambient +5 °C to 300 °C, and a fan provides a constant and uniform temperature.

Vials are automatically inserted into the carousel and can be shaken in slow, medium, or high mode during the equilibration phase through a back and forth movement of the carousel.

Two motor-driven levers lift the vials out of the carousel for the sampling when they are placed in correspondence with the sampling needle, or for their recovery when they are placed under the inlet/outlet hole of the oven.

The carousel and the lifters can be moved manually by using the commands in the **Movement** page of the **Maintenance** section of the software. See "Maintenance" on page 82.

Sampling System

The sampling system consists of an electrically actuated 6-port switching valve equipped with a stainless steel coated loop. See Figure 4.

Figure 4. Sampling System

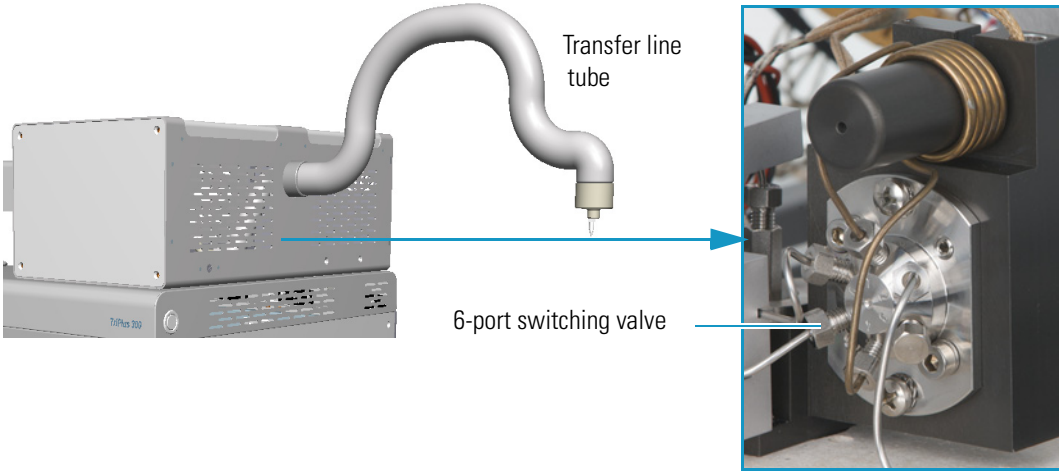

The standard volume of the loop is 1.0 mL. Three optional loops with a volume of 0.5 mL, 3.0 mL, and 5.0 mL are available. The transfer of gas from the headspace sampler to the GC is carried out through a heated transfer line tube, which is a 1.0 mm i.d., 80 cm long stainless steel tube internally coated with inert material. A needle is screwed at the end of the transfer line to be introduced into the GC injector. See "Installation Notes" on page 18.
The components are placed inside an insulating aluminum box that can be heated from ambient +5 °C to 300 °C. The switching valve group is protected by a thermally insulated aluminum box.

Pneumatic Interface

The pneumatic interface on the back of the sampling system includes the connectors to make pneumatic connections among the TriPlus 300 Headspace sampling system and the external devices. See Figure 5.

Figure 5. Pneumatic Interface

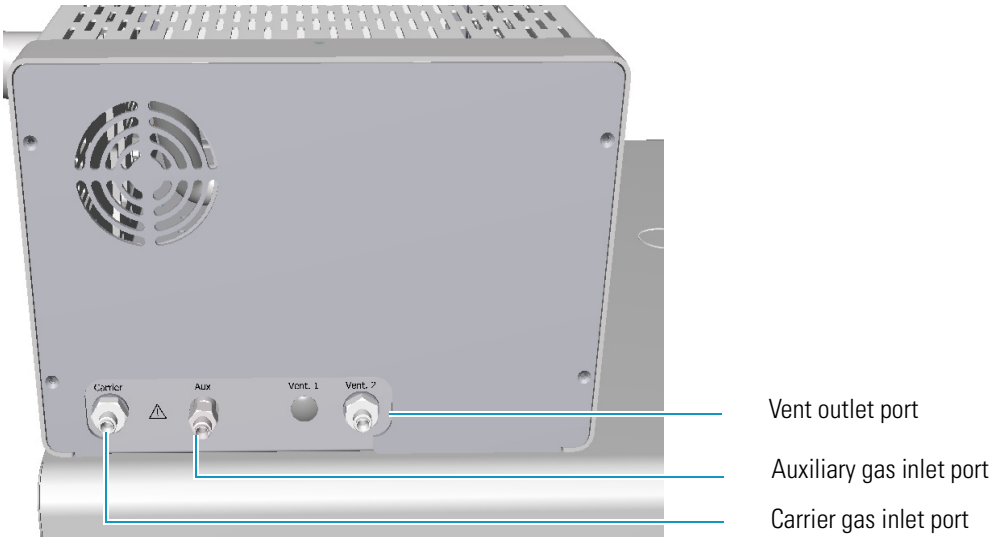

The pneumatic interface includes:

- A inlet port marked **Carrier** for connecting the carrier gas coming from the GC.
- An inlet port marked **Aux** for connecting the auxiliary gas supply from the cylinder.
- An outlet port marked **Vent** for connecting the instrument to an exhausting device.

See also "Plumbing the Connection to Gas Chromatograph" on page 20.

Electrical Interface

The electrical interface on the back of the Main Unit includes the connectors to make electrical and communication connections among the unit and the external devices. See Figure 6.

Figure 6. Electrical Interface

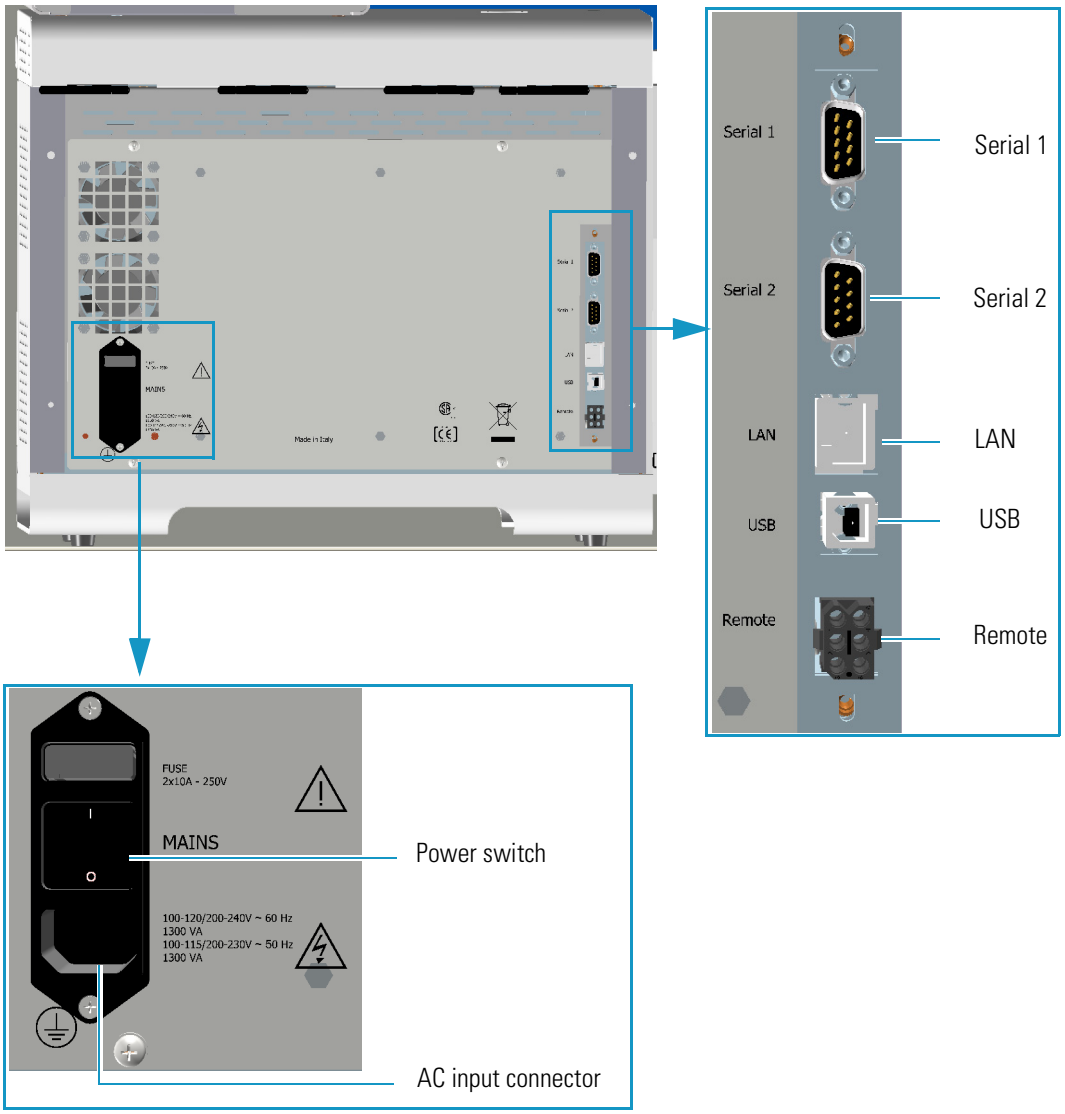

The electrical interface includes:

- The Power Switch marked **Mains** to power the instrument On/Off.
  - Position I = instrument On
  - Position O = instrument Off
- AC Input connector (Main socket) for connecting the power cable to the Main Unit and the wall outlet.

  The power rating is: 100-120/200-240 Vac ±10% max; 60 Hz; 1300 VA.
  100-115/200-230 Vac ±10% max; 50 Hz; 1300 VA.

  The power supply includes two 10 A, 250 V fuses.
- A RJ45 connector marked **LAN** for the network connection.
- An USB port for service use only.
- A 9-pin male connector marked **Serial 1** for service use only.
- A 9-pin male connector marked **Serial 2** to dialog with the Autosampler Unit.
- A connector marked **Remote** to synchronize the TriPlus 300 Headspace sampling system with the GC (Ready In/Out and Start In/Out signals). See the **Autosampler Handshake** connector on the back of the GC.

See also "Making the Electrical Connections" on page 22 and "Making the Power Connections" on page 23.

Touch screen

The touch screen is the user interface that provides immediate and detailed status displays, and guidance for ease of use and local control. See Figure 7.

Figure 7. Touch screen

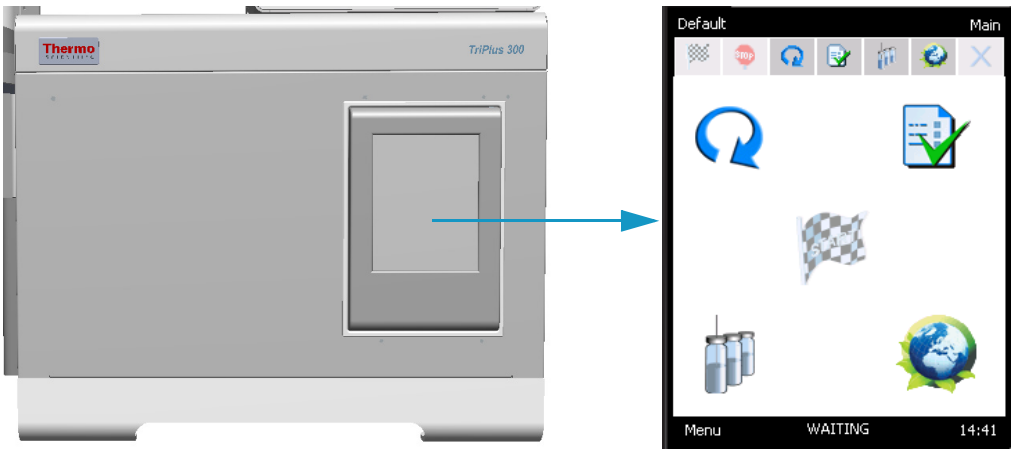

For further details, see Chapter 2, "TriPlus 300 Headspace User Interface."

Autosampler Unit

The Autosampler Unit is located on the left side of the Main Unit. It can operate using normal headspace vials with magnetic caps and different sizes such as 10, 20, and 22 mL. See Figure 8.

Figure 8. Autosampler Unit: Front and Back View

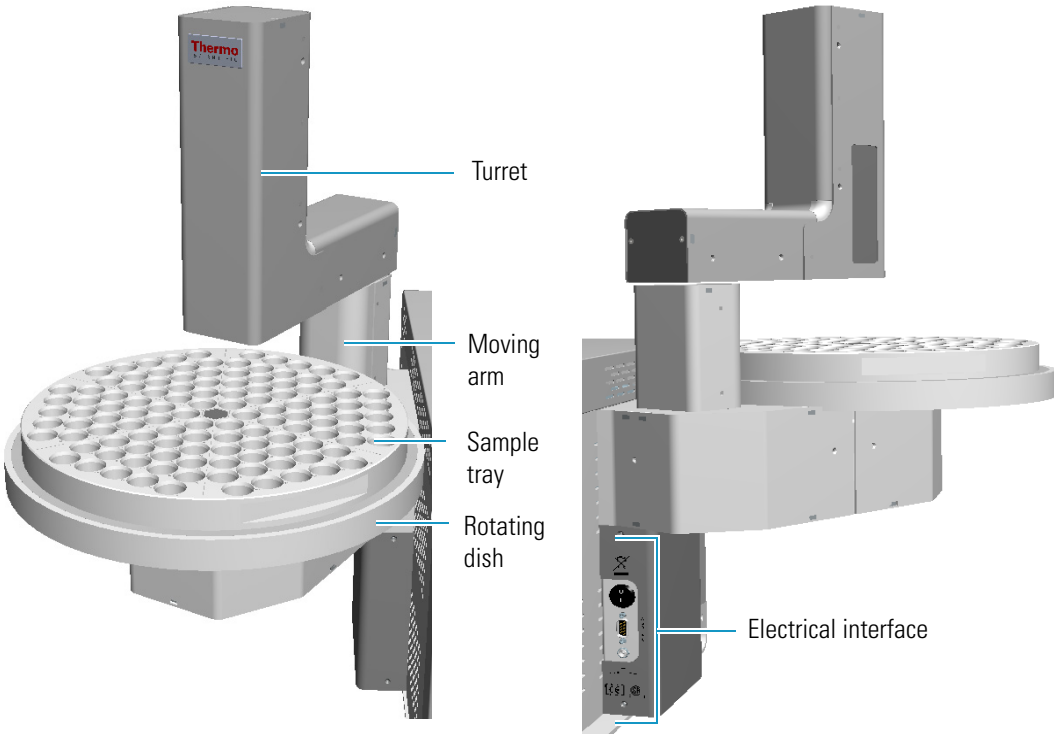

The Autosampler Unit includes:

- A moving arm and a rotating dish placed under the tray. The arm shifts from the tray to the insert position on the Main Unit. There is also a moving arm on the turret (vertical Z axis) to catch the vials on the tray and release on the Main Unit or the other way round.

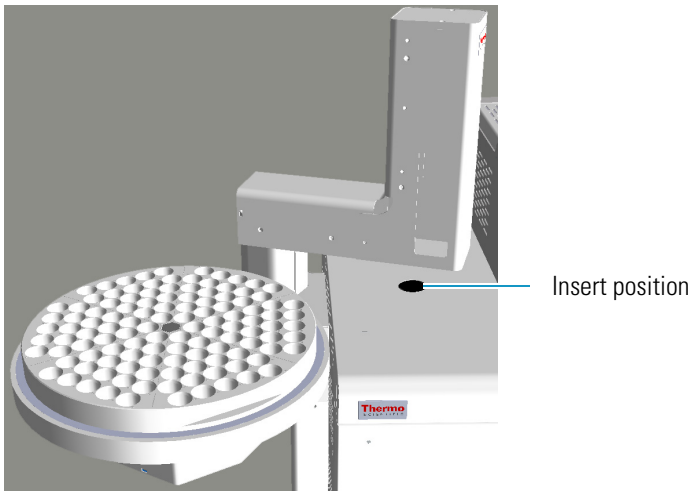

- A 120-position sample tray subdivided into 6 triangular sectors with each containing 20 seats. See Figure 9.

Figure 9. 120-position Sample Tray

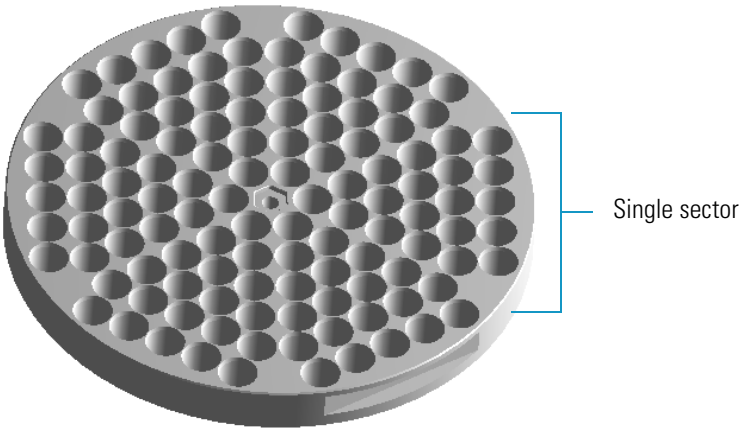

The vial numbering is:

1st Sector	2nd Sector	3rd Sector	4th Sector	5th Sector	6th Sector
1 - 20	21 - 40	41 - 60	61 - 80	81 - 100	101 - 120

- The electrical interface is located on the back. See Figure 10.

Figure 10. Autosampler Unit: Electrical Interface

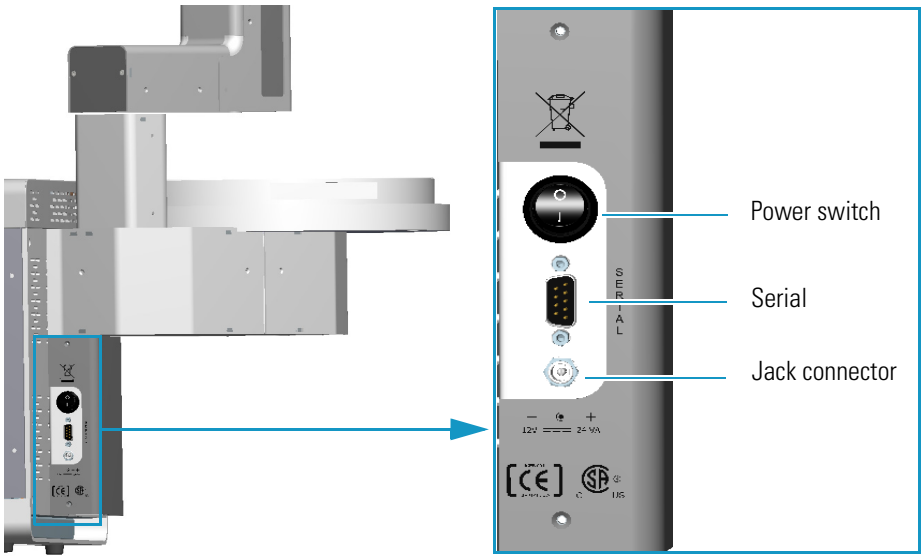

The electrical interface of the Autosampler Unit includes:

- The **Power Switch** to power the instrument On/Off.
  - Position I = instrument On
  - Position O = instrument Off

- A 9-pin male connector marked **Serial** that communicates with the Main Unit.
- A jack connector marked **12V, 24 VA** for the connection of the Vdc power cable of the external portable power supply.

The Autosampler Unit can be equipped with the following optional components:

- A 60-position sample tray subdivided into 6 triangular sectors with each containing 10 seats.
- A Chiller for cooling all the vials on the tray through a refrigerant coil installed underneath the plate. See "Chiller" on page 105.
- A Barcode reader. See "Barcode Reader" on page 107.

Pneumatics

The pneumatics scheme is shown in Figure 11. The instrument is equipped with two separate inlets on the back for carrier gas (CARRIER IN), and auxiliary gas (AUX IN).

Figure 11. Pneumatics

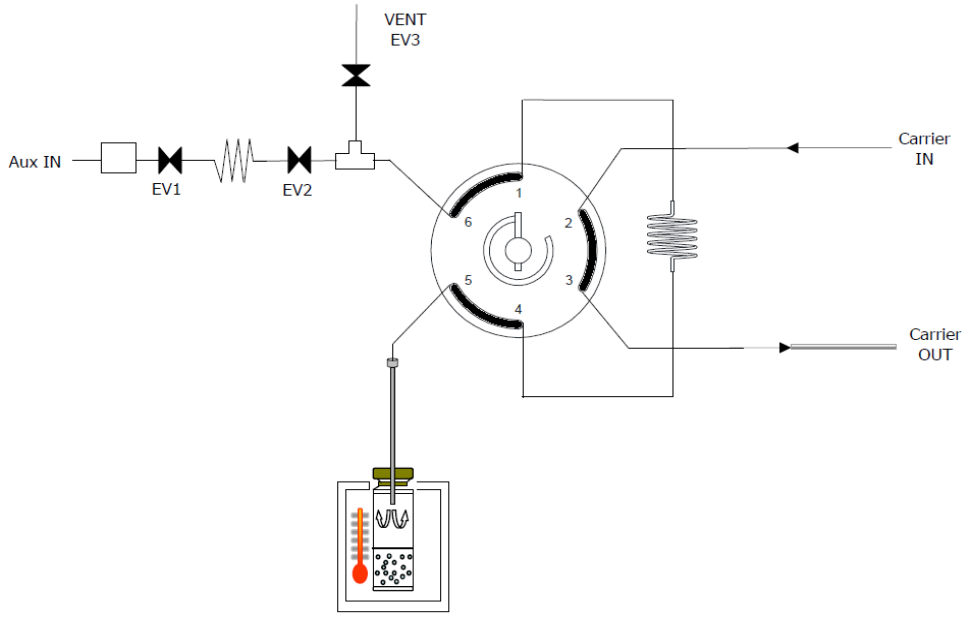

- The **carrier gas** can be regulated by the gas chromatograph, the TriPlus 300 Headspace sampling system, or both. If the carrier gas pressure is lower than 50 millibar, the instrument signals an error condition, and the sequence cannot be started. The carrier gas flows to the injector through the transfer line.
- The **auxiliary gas** pressurizes the vials and transfers the analytes from the sample into the loop. It is possible to use a gas other than the carrier gas (usually Nitrogen).
  The auxiliary gas is regulated by a electronic flow control (EFC).

Analytical Cycle

The analytical cycle of a sample is made up of a sequence of operative phases starting from the vial loading into the thermostatic oven until its recovery. The operative phases are:

- Standby
- Equilibration
- Pressurization
- Loop Fill
- Injection
- Vial Venting
- Purging

Standby

The instrument is in standby condition before and after a sampling sequence, and between a sampling and the next one of the same sequence. The Aux In valves **EV1** and **EV2** are open while the vent valve **EV3** is closed, so the auxiliary gas flushes at 30 mL/min through the switching valve, the sampling loop, and the needle to prevent carry over. See Figure 12.
The carrier gas flows to the GC through the switching valve and the transfer line reaching the GC injector to feed the column.

Figure 12. Standby/Equilibration Phase

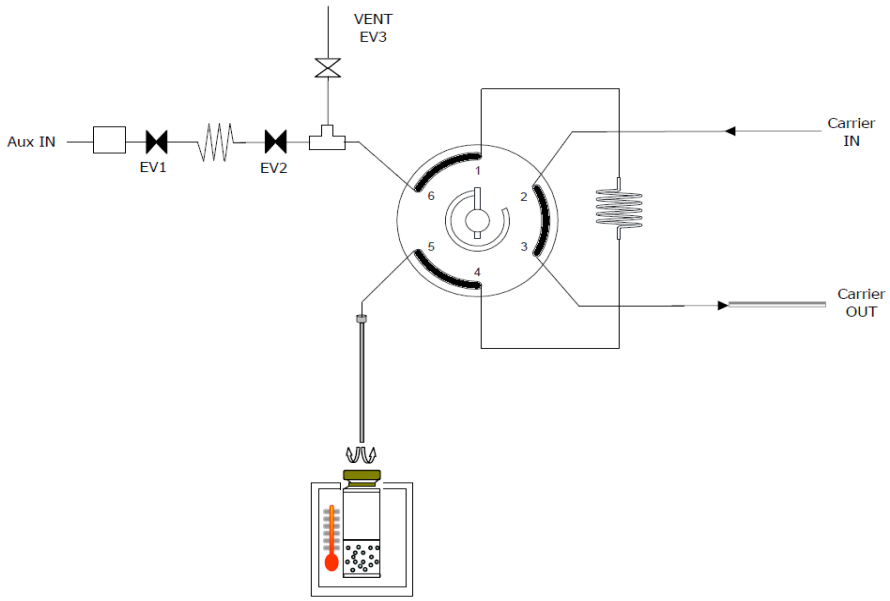

Equilibration

The vial is automatically moved into the oven. The equilibration stage retains the same valve configuration as the standby phase; see Figure 12. During the equilibration phase the vial remains in the oven at a constant temperature (OVEN TEMP) for a certain time (EQUILIBRATION TIME), and three shaking levels can be selected: low, medium, or high.

Pressurization

The pressurization phase starts at the end of the equilibration time. The shaking stops, if activated, and the carousel rotates till positioning the vial in correspondence of the sampling needle. The Aux In valves **EV1** and **EV2** close temporarily. After the sampling needle has pierced the septum vial, EV1 and EV2 open again, and the pressurization starts. See Figure 13.

Figure 13. Pressurization Phase

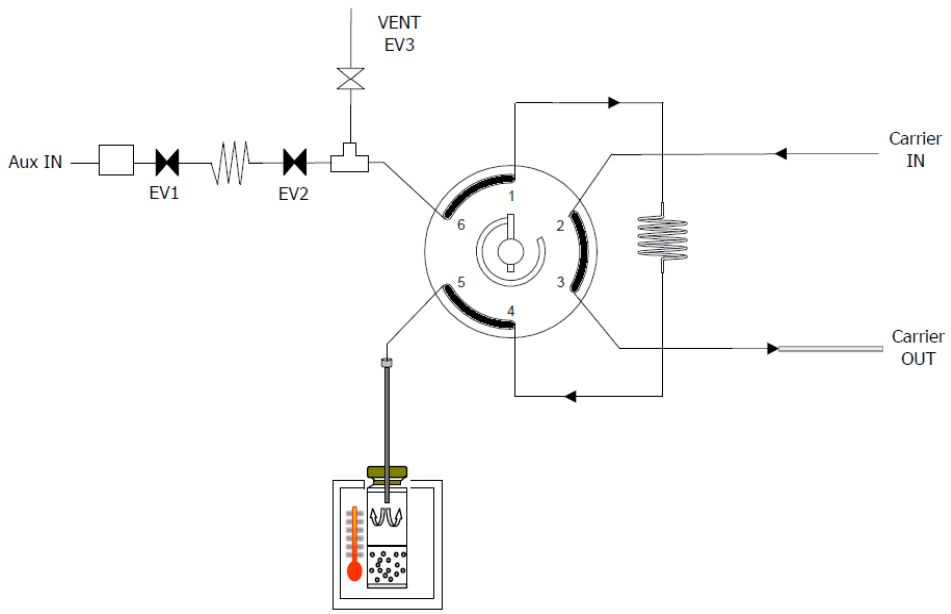

The vial can be pressurized in four different modes:

- **Pressure** — The vial is pressurized at a target pressure level.
- **Standard** — The pressurization of the vial starts at a programmed time.
- **Flow** — The flow rate is controlled for pressurizing the vial up to a fixed pressure. This mode allows to fill the vial reducing the perturbation.
- **Volume** — The flow rate is controlled for inserting the target volume in a given time. This mode is useful for calculating the molar amounts of the sample in the headspace, and then in the loop.

For more details, see "Pressurization " on page 53.

At the end of the pressurization, and during the pressure equilibration time of 0.2 min, the system performs a **vial leak check** to control the security of the vial. If the vial does not pass the leak check, a message will be shown in the log file.

Loop Fill

After the **vial leak check** and the **pressure equilibration time**, the Vent valve **EV3** opens. The overpressure inside the vial is expelled into the atmosphere through the Vent outlet on the back of the instrument, thus filling the sampling loop. The Vent valve EV3 will close at the programming time or at the pressure value. See Figure 14.

Figure 14. Loop Fill Phase

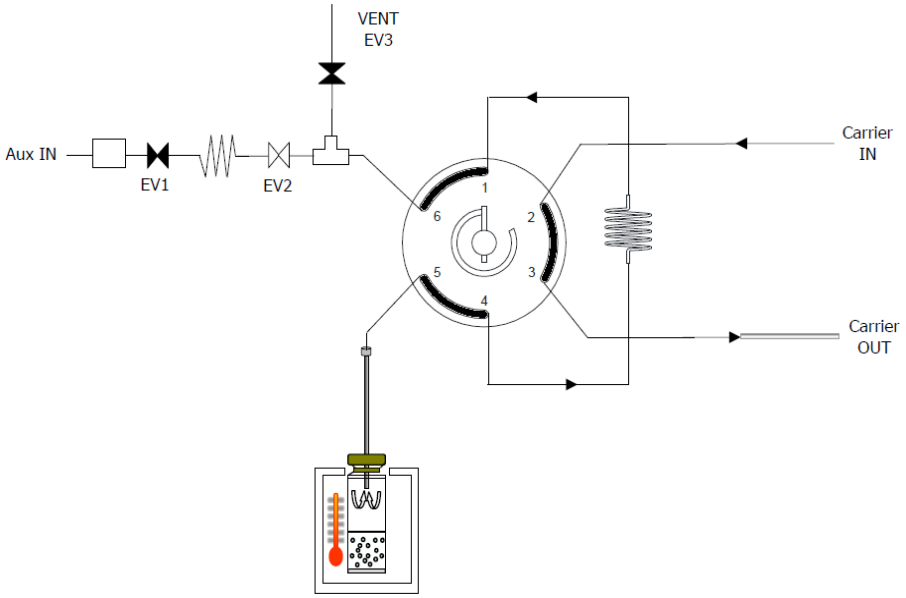

Three loop fill modes are supported:

- **Pressure** — Inserts the pressure target that the loop has to achieve with a totally opening of the EV3 Vent.
- **Custom** — Sets the rate at which the loop fills, and the final sampling loop pressure.
- **Standard** — Opens the Vent valve EV3 completely opens for the selected time.
  - By setting a shorter interval, the loop undergoes a light overpressure, thus sampling a volume higher than the nominal one.
  - By setting a longer interval, the loop equilibrates to the atmosphere, and the sampled volume is exactly the nominal one.

For more details see "Loop Fill " on page 54".

Injection

At the end of the Loop Filling phase, the Switching Valve rotates, and the carrier gas intercepts the sampling loop, and transfers its content into the GC column through the transfer line. See Figure 15. At the same time, the TriPlus 300 Headspace sampling system sends a start signal to the GC to begin the analysis.

Figure 15. Injection Phase

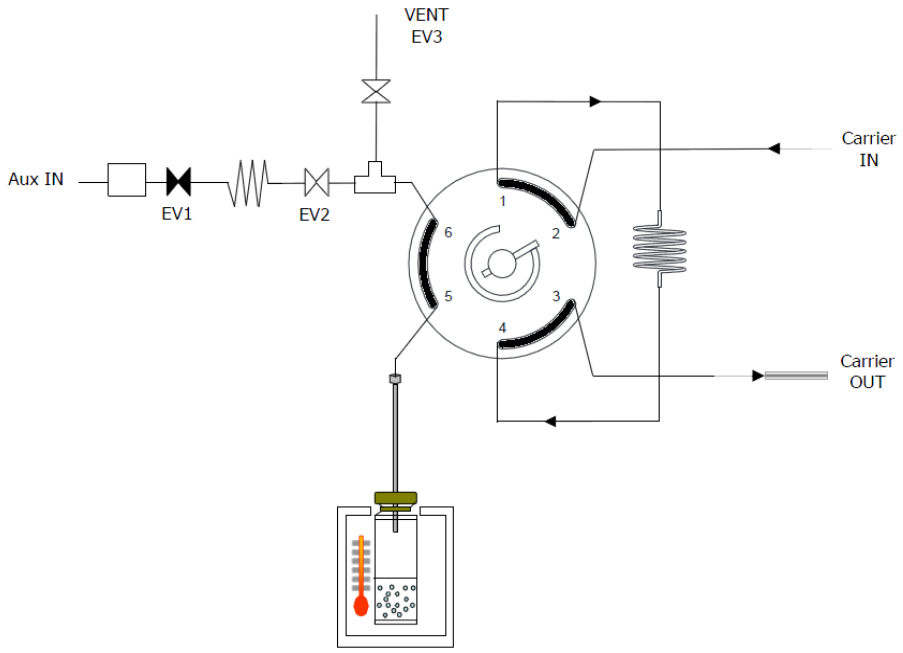

The TriPlus 300 Headspace sampling system operates in three different extraction and injection modes:

- **Standard** — The TriPlus 300 Headspace sampling system equilibrates the vial, punctures it once, fills the sample loop (single extraction), then starts a run while injecting the sample into the GC.
  The loading time of the vials into the oven is automatically calculated to guarantee the same equilibration time for all the samples, and the optimization of the total time analysis times. According to the equilibration times and GC time, more vials can be contemporaneously present inside the oven.

- **Multiple Headspace Injection (MHI)** — Each vial is pierced only once, but up to 100 injections can be performed before starting the GC analysis. This technique is used for trace analysis in order to concentrate in the GC injector (for example a PTV) or in a trap. After the first injection, the vial remains half-way between the oven and the sampling system. The sample cycle (pressurization, loop fill, and injection) is repeated for the number of times selected in the method. (Equilibration is not repeated). The start command to the GC is sent only at the end of the last injection.
  This operation mode does not allow the shake function of the vials sequentially, and each vial is incubated singularly.

- **Multiple Headspace Extraction (MHE)** — Each vial is sampled multiple times. Up to 100 samplings can be performed on the same vial automatically. Each vial is incubated first for a time equal to the equilibration time set in the method, while the incubation time of the subsequent samplings corresponds to the longest time set in the method (equilibration time or GC time). At each sampling an analysis is performed. Two typical uses for the multiple extraction mode are: calibration for solid samples and kinetic studies. Repetitions can be carried out in two modes: **single puncture** or **multiple puncture**.

  a. **Single puncture** — The vial is pierced only at the first sampling since the needle remains into the septum for all the subsequent samplings. After the vial equilibration, pressurization, and loop fill, the sample is injected into the GC, and TriPlus 300 Headspace sampling system sends the Start command to the GC. This sequence is repeated on the same vial for the number of replicates decided by the user. This operation mode does not allow the shake function of the samples because the vial remains half-way between the oven and the sampling system. For the same reason, the vials cannot be loaded sequentially, and each vial is incubated singularly.

  b. **Multiple puncture** — Works as above but each vial is brought to the carousel inside the oven after injection or vial venting, if set. The vial is lifted up at each subsequent replicate so that the septum is pierced again. This operation mode allows sample shaking, and guarantees the optimization of the working time just as in the standard operation.

Vial Venting

Vial venting is the next optional phase after the injection. During the vial venting the switching valve is in position **2**, and the valve **EV3** opens for 10 seconds in order to eliminate the residual pressure in the vial. See Figure 16.

Figure 16. Vial Venting Phase

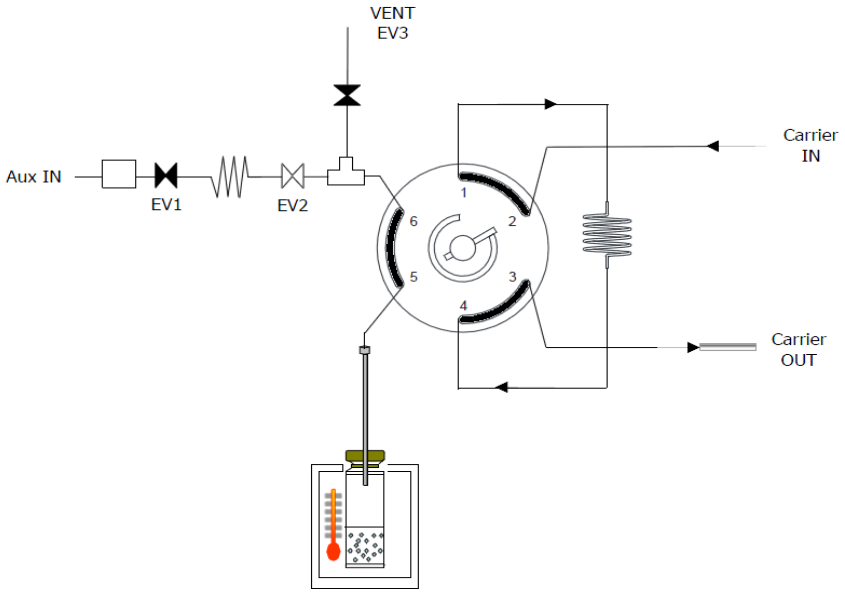

In **Multiple Headspace Extraction (MHE)** the vial venting is the default setting, and it is carried out in a different mode. It is not indispensable, but it can be useful to improve the technique.

Consists of a pressurization phase and venting simultaneously to the injection phase.

During the first half time of the injection, the TriPlus 300 Headspace sampling system opens the Valve **EV2** and closes the Vent valve **EV3** to pressurize the vial up to 2 bar.

During the second half time, the pressurization valve **EV2** is closed and the Vent vial **EV3** is opened in order to depressurize the vial.

Purging

The Purge phase consists of two phases: the first is fixed; the second is optional. See Figure 17.

Figure 17. Purging Phase

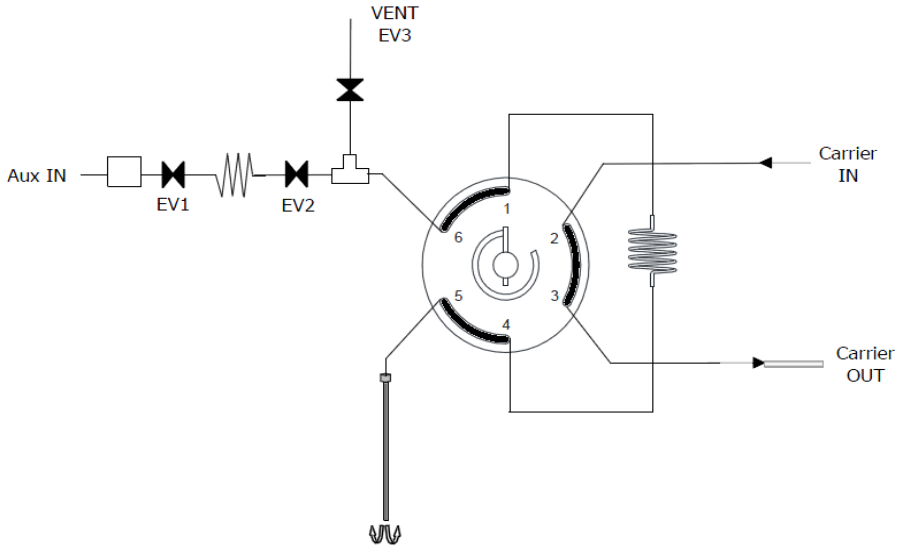

At the beginning of the purging phase the lifter sampling goes down, and the vial is removed from the carousel.

During the **fixed** phase the auxiliary gas flow is regulated to 100 mL/min and it is maintained for one minute. For both phases, the **EV3** is open, and the switching valve is in position **1** to connect the loop to the auxiliary gas circuit. The gas flows through the sampling valve, the loop, the needle, and the Vent valve **EV3** to guarantee cleaning of the system and to prevent the carryover.

In the **optional** phase you insert the time and the purging flow.

Installation Notes

This section provides some preliminary information for the installation and the connection of the TriPlus 300 Headspace sampling system, and lists the electrical requirements.

Who Performs the Installation

WARNING The TriPlus 300 Headspace sampling system should be installed by authorized Thermo Fisher Scientific field service engineers, who will check its correct operation.
For more details, please contact your Thermo Fisher Scientific local representatives.
Should the instrument not be installed by Thermo Fisher Scientific personnel, please strictly adhere to the following instructions.

Standard Outfit

Use the standard outfit checklist accompanying the instrument to verify that all items have been received.

Electrical Requirements

The instrument must be electrically supplied as indicated in the *TriPlus 300 Headspace Preinstallation Guide*.

WARNING The power line and the connections among the instruments must maintain good electrical grounding. Poor grounding represents a danger to the operator and may seriously affect the instrument performance.
Do not connect the TriPlus 300 Headspace sampling system to lines feeding devices of a heavy duty nature, such as motors, UV lamps, refrigerators and other devices that can generate disturbances. If other instruments, such as a computer, balance, printer, or others, have to be connected to the same electrical line as the TriPlus 300 Headspace sampling system ensure that the electrical line is capable of withstanding such electrical consumptions by calculating the total absorption.

Environmental Conditions

The instrument is generally best located in an environment where atmospheric conditions can be controlled and extreme temperatures avoided.
The precision of the instrument can be regarded as a function of the precision of the laboratory temperature control. Therefore, do not place the instrument near heating or air conditioning vents which may cause differential heating and drafts.
In laboratories with windows, window coverings should be installed to protect the instrument from direct sunlight.

For further details, refer to the *TriPlus 300 Headspace Preinstallation Guide*.

Lift and Place the TriPlus 300 Headspace Sampling System

Each person should move the instrument from the floor to the work space requires at least two people. Each person should position himself at one of the sides of the instrument, with their hands underneath it.

The instrument is normally installed on the left side of the gas chromatograph.

The maximum distance from the gas chromatograph should be calculated considering the length of the transfer line, which is approximately 80 cm.

For further details about the working space, refer to the *TriPlus 300 Headspace Preinstallation Guide*.

Assembling the TriPlus 300 Headspace Sampling System

CAUTION This operation must be carried out by authorized and trained Thermo Fisher Scientific technical personnel.

❖ **To assemble the TriPlus 300 Headspace sampling system:**

1. Remove the lower cover of the Autosampler Unit using a 1.5-mm Allen wrench for the four fixing screws.
2. Remove the plastic cover of the Autosampler Unit using a 1.5-mm Allen wrench for the three fixing screws.
3. Manually screw in the two spacer screws on the two central holes on the left side of the Main Unit.
4. Hook the Autosampler Unit to the two spacer screws on the Main Unit.
5. Install the four screws holding the Autosampler Unit to the Main Unit using a 3 mm Allen wrench.
6. |Tighten the two screws hooking the Autosampler Unit to the Main Unit using a 8 mm Allen wrench.
7. Reinstall the lower cover by using the 1.5 mm Allen wrench.

Pneumatic Supply

TriPlus 300 Headspace sampling system is equipped with two distinct inlets for carrier and auxiliary gas. The maximum inlet pressure allowed is 9 bar (130.5 psig).

Tip Use a two-stage pressure regulator upstream from the lines and a single-stage regulator near the instrument.
Install filters on the gas lines to eliminate hydrocarbons, oxygen and humidity, and to achieve the best performance.

The choice of carrier gas is primarily based on the analysis and the type of detector installed on the gas chromatograph. You can use either helium or hydrogen up to 9 bar to work in fast GC analysis.

The auxiliary gas can be different from the carrier gas (for example nitrogen) because the inlets are separate. Usually nitrogen is used because of its density and low cost.

WARNING When using hydrogen as carrier gas, be very careful to avoid the formation of explosive air/hydrogen mixtures. Check the seal on the lines which supply the hydrogen. Hydrogen must not be used as an auxiliary gas.

Connect the instrument to the supply line using preconditioned steel or copper tubing with the minimum number of connections. Do not use plastic tubing as it is permeable to Oxygen and other substances and could contaminate the column or detector.

The tubing diameter is based on the distance between the instrument and the gas supply source and the total gas flow rate is required.

A 1/8-in tubing, as the one supplied with the instrument, is suitable for most cases.

The gas inlets, located on the back of the instrument, consists of 1/8SW male bulkhead connectors.

To connect the pipes proceed as follows:

- Cut the tubing to the desired length. Always leave it slightly longer for minor movements of the instrument.
- Fit a 1/8-in stainless steel nut on the tubing and a brass seal with the conical part facing outwards. Both pieces are shipped with the instrument.
- Insert the tubing to the bottom of the gas inlet connector and finger-tighten the nut
- With a 7/16-in wrench tighten the nut 1 and 1/4 turns.
- Check the seal on the pneumatic line.

Plumbing the Connection to Gas Chromatograph

This section provides the instruction for plumbing the TriPlus 300 Headspace sampling system to the GC.

Connecting the Transfer Line

Connect the TriPlus 300 Headspace sampling system to the gas chromatograph by inserting the end of the transfer line in the gas chromatograph SSL/SSLBKF injector.

Figure 18. Transfer Line Connection

The transfer line needle has dimensions 0.7 mm o.d. and 0.4 mm i.d.

CAUTION For connecting the transfer line to the GC injector, the septum holder must be replaced with the dedicated adapter supplied with the instrument. See Figure 19.

For details see "Installing the HS Adapter Kit on the SSL/SSLBKF Injector" on page 95.

Figure 19. Loop Type HS Adapter

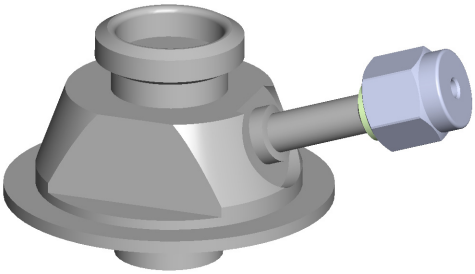

To prevent the transfer line needle from blocking the sample during insertion and from bending, replace the septum cap of the SSL/SSLBKF injector with the septum cap provided into the standard outfit of the TriPlus 300 Headspace sampling system. See Figure 20

Figure 20. Original and Dedicated Septum Cap

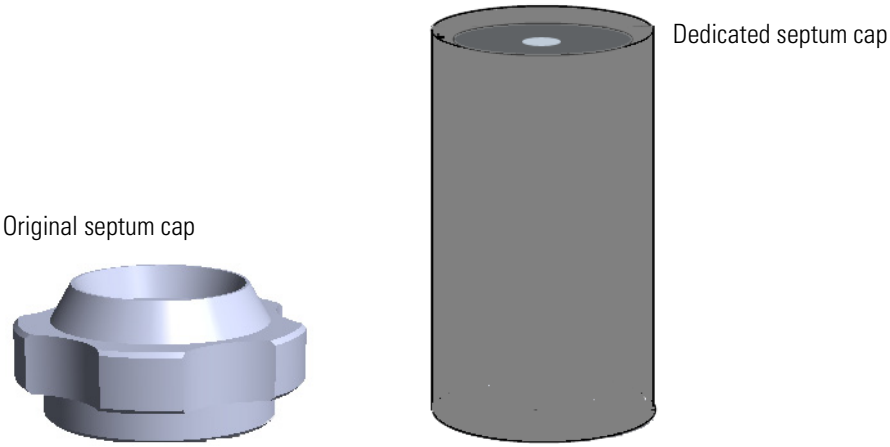

Connecting the Carrier Gas

In the standard configuration, the instrument is set up to use the gas chromatograph carrier gas regulation system, and thus the standard configuration is not equipped with any pressure or flow rate regulator.

Figure 21 shows you how to connect the carrier gas:

Figure 21. Carrier Gas Connection

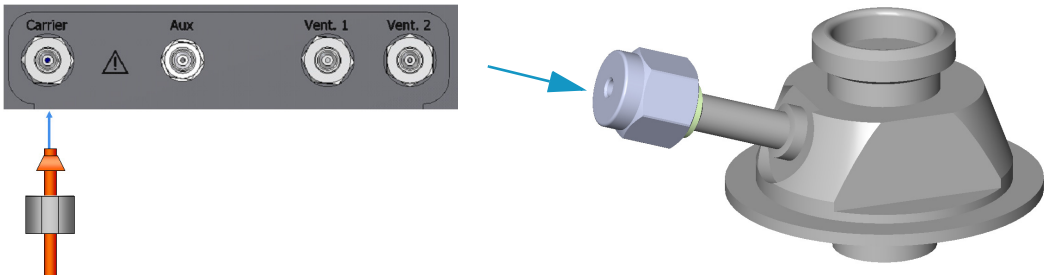

- Using the proper nuts and ferrules, connect the carrier gas supply tube between the dedicated loop type HS adapter on the SSL injector and the inlet port marked **Carrier** on the back of the Main Unit.
- Regulate the pressure or gas flow rate directly from the gas chromatograph.

Note Adding an external circuit to the carrier gas line causes an additional pressure drop which cannot be calculated. Thus it may be possible that the carrier gas flow rate calculated by the gas chromatograph is much higher than the one actually occurring.

Connecting the Auxiliary Gas

Figure 22 shows you how to connect the auxiliary gas:

Figure 22. Auxiliary Gas Connection

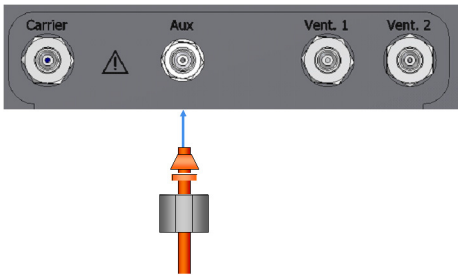

- Connect the auxiliary gas supply tubing coming from the cylinder to the inlet port marked **Aux** on the back of the instrument using an 1/8 SW adapter. The maximum inlet pressure is **4 bar**.

Making the Electrical Connections

Perform the electrical connections as follows:

❖ To perform the electrical connections

1. Using the RS232 serial cable provided, connect the RS232 connector marked **Serial 2** on the back of the Main Unit to the RS232 connector marked **Serial** on the back of the Autosampler Unit.
2. Using the LAN cable, connect the RJ45 connector marked **LAN** on the back of the Main Unit to the network.
3. Using the cable provided connect the connector **Remote** on the on the back of the instrument to the **Autosampler Handshake** connector on the back of the gas chromatograph.

Making the Power Connections

CAUTION For safety the instrument is grounded through a three-conductor power line cord according to the International Electrotechnical Commission (IEC) regulations.

The cord must be inserted in a socket equipped with a correctly connected earth ground contact. Make sure the socket is grounded. Before connecting the instrument to the power supply, make sure that the power switches on the rear of the Main and Autosampler Unit are in the OFF position.

❖ To connect the power to the TriPlus 300 Headspace sampling system

1. Connect the power cable to the AC Input connector (Main socket) on the back of the Main Unit.
2. Plug in the Vdc power cable of the external portable power supply into the jack marked **12 V-24 VA** located on the back of the Autosampler Unit.

Powering On the TriPlus 300 Headspace

❖ To power on the TriPlus 300 Headspace sampling system

1. Before turning on the power make sure that the chromatography system is properly connected and powered on, and the gases are flowing into the system.
2. Flip up the power switch, located on the back of the Main Unit, to the **On** (up) position marked **I**.
3. Flip up the power switch, located on the back of the Analytical unit, to the **On** (up) position marked **I**.
4. The TriPlus 300 Headspace sampling system automatically runs the **self-testing** routine during which all the configured devices are checked one by one.
5. At the end, the Hardware tab of the diagnostic page shows all the devices in a list. See "Hardware" on page 88 for details.

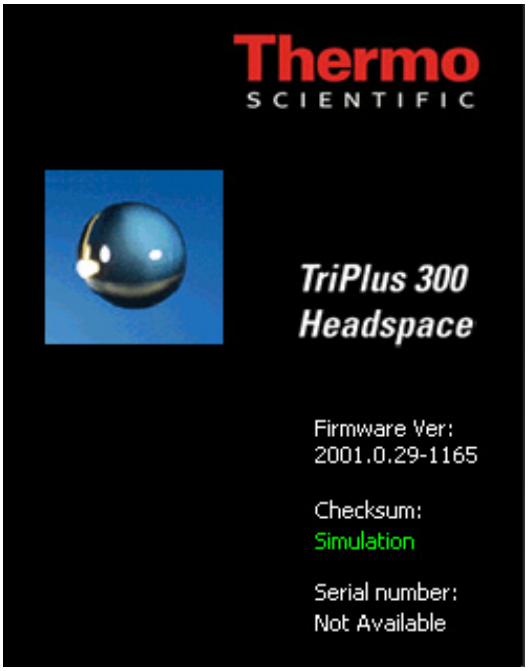

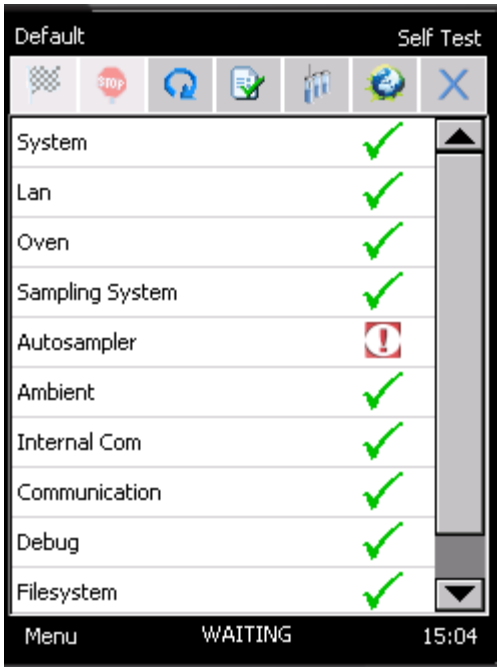

Setting the Communications

❖ **To set the communication between Main Unit and Autosampler Unit**

1. Select **Menu | Tool | Setup**.

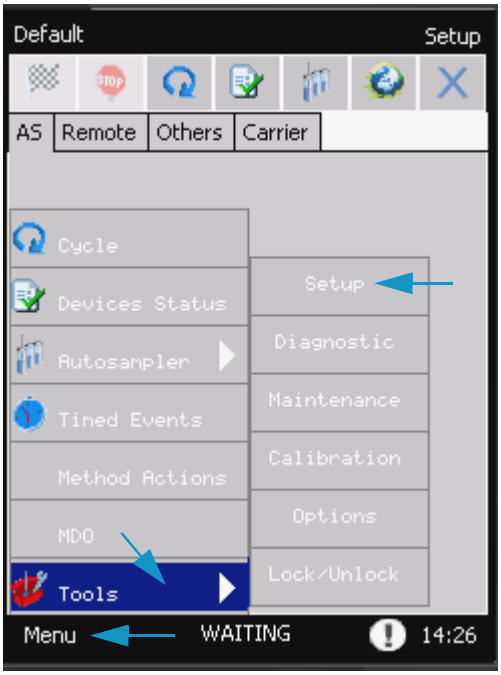

2. Press **Unlock**, then insert **1111** as password, and press **OK**.

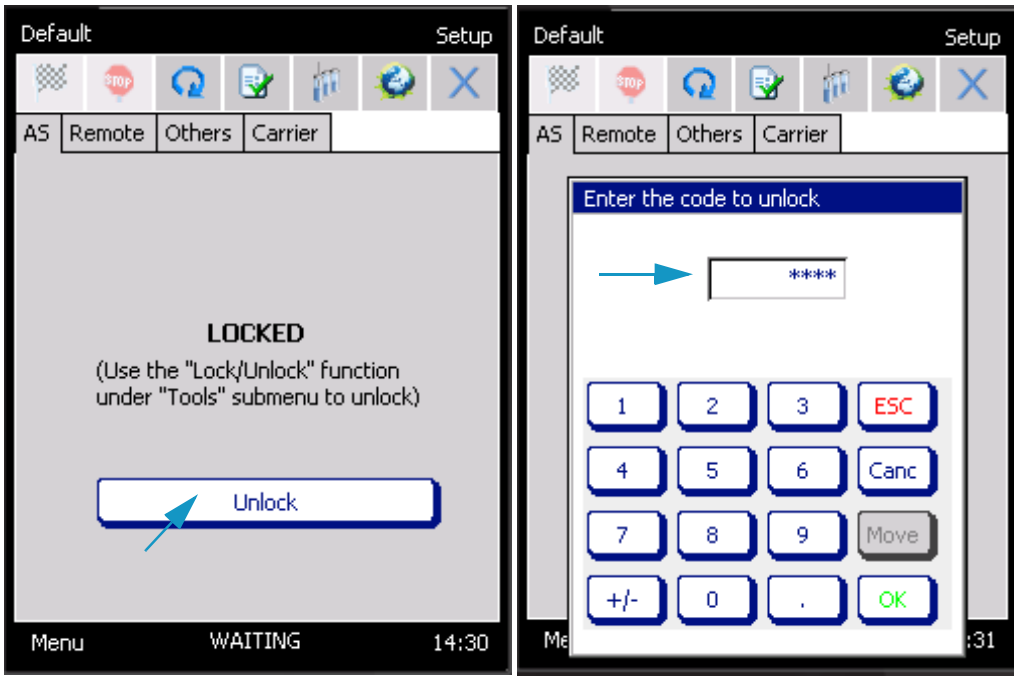

3. In the **Tray Capacity** field select the number of sample positions of the tray. Choose **60** or **120** accordingly.

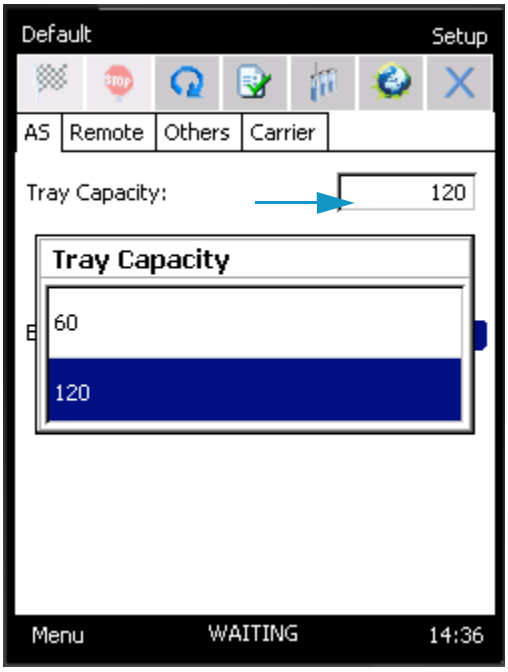

4. Select Barcode **On** if present, otherwise select **Off**.

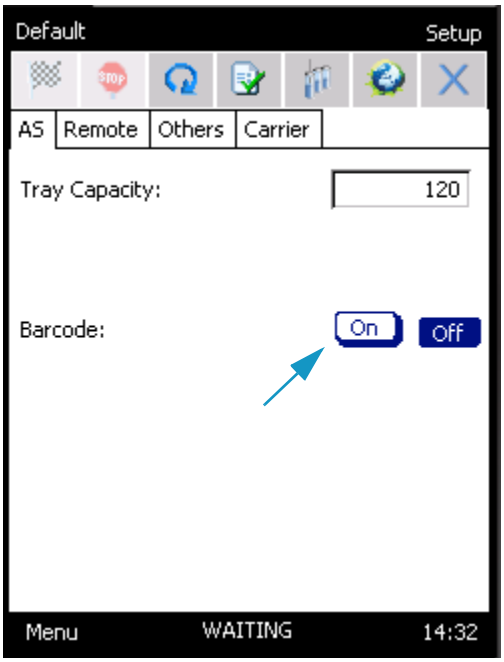

Note TriPlus 300 Headspace sampling system communicates with the gas chromatograph via two connections:

- A connection for receiving the **Ready In** signal from the gas chromatograph when it is in the Ready condition.
- A connection to send the gas chromatograph the **Start Out** signal.

In standard conditions, the instrument is configured to receive the **Ready In** and to send the **Start Out** commands as a closing contact.

On **Menu |Tools | Setup | Unlock | Password 1111 | Remote** the configuration for both the commands is set as **Normally Open**.

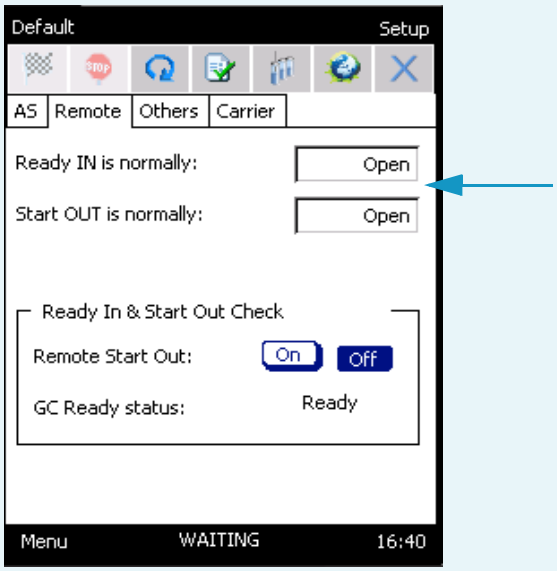

Leak Test

After the TriPlus 300 Headspace sampling system has been assembled and connected to the gas chromatograph, it is advisable to perform a leak test on the entire pneumatic circuit, from the carrier gas inlet to the column outlet. This procedure should be repeated every time a modification is being made on the system, for example: column or transfer line replacement.

❖ To perform the leak test

1. Disconnect the column from the detector and insert a silicone rubber septum in its end.
2. Leave the TriPlus 300 Headspace sampling system in stand-by conditions, and regulate the carrier gas pressure to approximately **2 bar** (30 psig). Wait a few minutes for the pressure to stabilize in the entire system and check the value of the current pressure.
3. Turn off the pressure supply and check the value reading. After a minimum decrease, the pressure value must be constant.
   - If after approximately five minutes the pressure drop is less than 0.04 bar, the system is sealed.
   - If the pressure decreases more than 0.04 bar, it means that there is a leak in the system.
     - Re-pressurize the system and find the leak by using a soapy solution.
     - Find the leak, tighten the fitting until it is eliminated and repeat the leak test.
4. Remount the column.

Usage Notes

This section provides some advice about the Headspace technique for optimizing the parameters that can affect the sensitivity, precision, and accuracy of an analysis.
The related topics are:

- “Temperatures” on page 28
- “Carrier Gas Optimization” on page 28
- “Auxiliary Gas Pressure Optimization” on page 29
- “Equilibration Time Conditioning” on page 29
- “Shaking Conditioning” on page 29
- “Sample Vials Size ” on page 29
- “Sample Vial Septa ” on page 30
- “Vial Closure ” on page 30
- “Matrix Effects ” on page 31

Temperatures

The oven temperature can have a profound effect on the concentration of analyte that passes into the gas phase.

In general as the temperature increases, the amount of analyte in the gaseous phase increases, and consequently the sensitivity of the method.

The tendency of a compound to go into the gaseous phase is determined by the partition coefficient **K**:

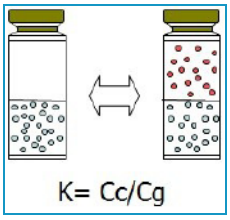

where: **Cc** is the concentration of the analyte in the condensed phase (matrix phase), and **Cg** is the gaseous phase.

The partition coefficient **K** is highly dependent on temperature as demonstrated by the following equation:

dK/dT = 1/T2

Consider the following when choosing the oven temperature:

- The best results are achieved when the temperature is maintained at the minimum level sufficient to ensure the desired analytical sensibility
- Do not set the oven temperature within 10 °C of the boiling point of any solvent, except in special cases.
- Thermo labile compounds may degrade at elevated temperatures.

The manifold and transfer line temperatures must be higher than the oven temperature to avoid the condensation of the analytes in the pneumatic system, and consequently avoid the presence of carry over.

The function Method Developing Optimization (MDO) increases the temperatures in steps for optimizing your method. See "Method Developing Optimization (MDO)" on page 72.

Carrier Gas Optimization

The carrier gas flow rate should be set high enough to transfer the headspace sample out of the loop into the GC without causing peak broadening.

For example, for a packed GC column that gives 15-seconds-wide peaks, the flow should be at least 6 mL/min for a 1 mL loop. For a 3 mL loop and the same conditions, the minimum flow should be 18 mL/min.

For a capillary column that generates a 1-second-wide peak, the flow rate would be higher than 60 mL/min. In this case the flow rate will be the total flow (column flow + split flow).

Auxiliary Gas Pressure Optimization

The pressure developed in the vial allows you to transfer the head space sample to the loop. The auxiliary gas pressure should be set at the minimum value to ensure the loop filling.

To optimize your selection of vial pressurization, run a series of vials using different pressures, and interpret the optimum condition from peak areas versus vial pressurization.

Note Optimization is valid only for analysis of a specific sample at a specific oven temperature.

Equilibration Time Conditioning

The time that the sample vial spends in the oven determines the amount of analyte in the head space and the presence of absence of equilibrium.

In order to determine if the equilibrium is reached, use the MDO function, increasing the equilibration time for each step. Then plot the peak area versus equilibration time. The system is at equilibrium when the curve flattens out.

Shaking Conditioning

In same cases, and especially for aqueous samples, shaking during the equilibration phase reduces the time required to reach the equilibrium.

The function Method developing Optimization (MDO) optimizes the shaking level. See "Method Developing Optimization (MDO)" on page 72.

Sample Vials Size

The TriPlus 300 Headspace sampling system can use 10 mL, 20 mL, and 22 mL vials. The vial size may change with each method in use in a sequence.

The vial can have crimp caps or be screw cap vials with flat or rounded bottoms and can have clear or amber glass. Use amber glass for light –sensitive samples.

Vials must be conform to the following specifications:

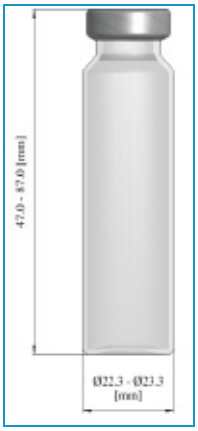

Generally, fill the 10 mL vial up to 50% of typical height, or up to 50-75% of the maximum height with 20 – 22 mL vials.

A larger sample size may give greater sensitivity. Peak areas are influenced by the relative amount of the gas and condensed phases in the vial. Increasing the sample size may increase the peak area. If the sensitivity is not a fundamental requirement, small vials may be preferred because a shorter equilibration time is required.

Missing and Wrong Size Vials

Before sampling, the Autosampler Unit moves to the position of the current vial and moves down to check the presence and size of the vial, and the **status** frame will be displayed.

If the instrument does not find the vial, or the vial is a different size than the one set in the method, the autosampler performs the action selected in **Method Actions**.
See "Method Actions" on page 69.

The information of missing or wrong size vials will be reported in the **Log** page of the **Status.** window. See "Status" on page 37.

IMPORTANT The Autosampler Unit recognizes the type of the vial by its height. They are commercial 22 and 20 mL which have the same height; in this case the autosampler does not distinguish them.

Sample Vial Septa

The use of septa with the lower layer in PTFE is recommended to avoid contamination of the sample. Always confirm that there are no peaks in the blank analysis chromatogram.

Vial Closure

A frequent, and non-negligible cause of error, is a leak due to incorrect closure of the vial. To close the vials, use a crimper then check each vial for proper crimping.

- The cap should be finger-tight.
- If the cap is loose the vial may leak.
- Adjust the crimper and close the vial again.
- The cap should be flat.

The deformation of the cap can generate some problems for the autosampler during the pick- up phase of the vial from the tray or from the Oven.

Correct crimp	**Over crimp**	**Under crimp**
Undeformed sides, good seal	Deformed sides, upward bulge, probably problem with autosampler	Loose seal, caps twists easily

Matrix Effects

The composition of the sample matrix may affect the amount of the analyte that is transferred to the headspace.

Adding an inorganic salt to an aqueous sample increases the concentration of organic molecules in the gas phase. The salts makes these compounds less soluble in the sample matrix, and the sensitivity increases.

Usually the matrix is not a pure compound, but a complex mixture of compounds, some of which may be not volatile. The interaction of the matrix components with the analyte influence its solubility. This is called matrix effect.

Matrix effects are important when an external standard must be developed. The composition of the matrix in the standard must resemble as much as possible that of the sample.

The effect of the matrix on a standard can be compensated by quantifying results using MHE.

2

TriPlus 300 Headspace User Interface

This chapter describes the user interface of your TriPlus 300 Headspace sampling system.

Contents

- TriPlus 300 Headspace User Interface Overview
- Status Bar
- Desktop
- Tool Bar
- Device Status and Ready Conditions

TriPlus 300 Headspace User Interface Overview

The TriPlus 300 Headspace sampling system user interface is a touch screen that provides immediate and detailed status display and guides you for ease of use and local control. See Figure 23.

Figure 23. User Interface

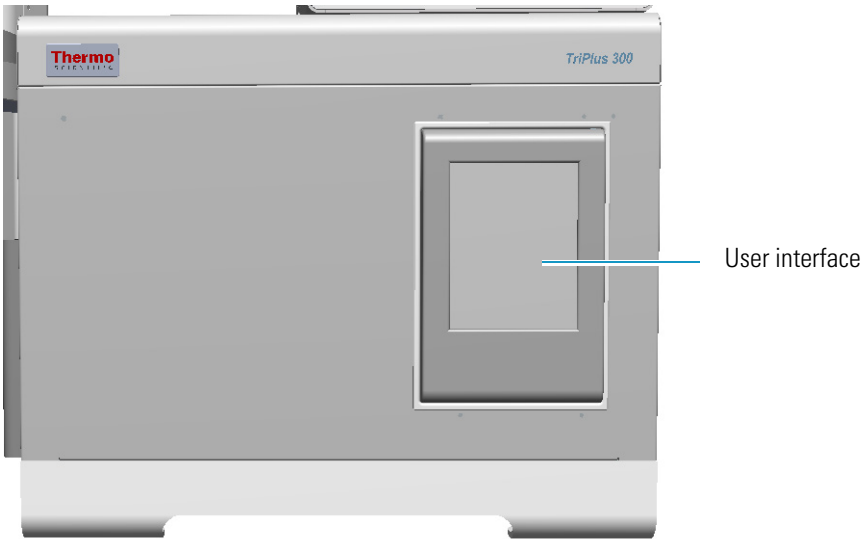

When the TriPlus 300 Headspace sampling system is powered on, the touch screen main menu appears. See Figure 24.

Figure 24. Touch screen Main menu

The display allows to access to every parameter by no more than four touches on the touch screen. The display is subdivided into three blocks: **Status Bar**, **Desktop**, and **Tool Bar**. See Figure 25.

Figure 25. Display

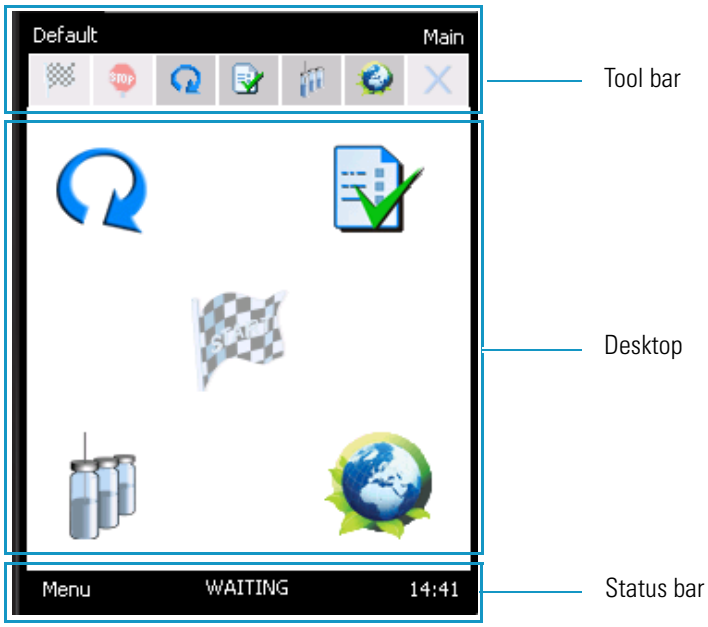

For details see the following sections:

- "Status Bar" on page 36
- "Desktop" on page 41
- "Tool Bar" on page 42

Status Bar

The Status bar is on the bottom of the screen. This section includes the functions **Menu**, **Status**, and **Time Clock**. See Figure 26.

Note If your system has a problem or other communications, a blinking **exclamation mark** appears on the right of the status bar indicating an alarm condition. See Figure 26.

Figure 26. Status Bar Description

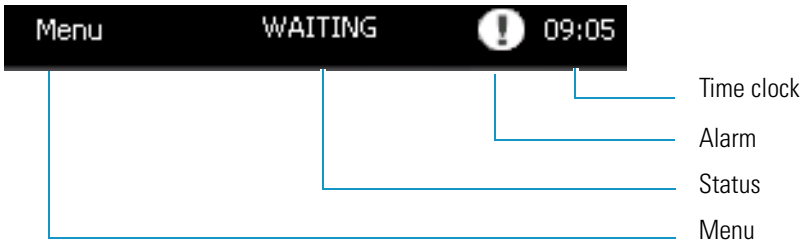

For details see the related topics:

- "Menu" on page 36
- "Status" on page 37
- "Time Clock and Date" on page 40

Menu

This section allows access to many functions and gives you the ability to select the submenu. See Figure 27.

Figure 27. Menu Page

Menu and Submenu items are reported in Table 1together with the chapter of the manual where you find detailed information.

Table 1. Menu, Submenu, and Reference Chapter

Menu	Submenu	Reference
Cycle	---	"Cycle" on page 49
Device Status	---	"Device Status and Ready Conditions" on page 43
Autosampler	Sequence	"Sequence " on page 61
Times Events	---	"Timed Events" on page 66
Method Actions	---	"Method Actions" on page 69
MDO	---	"Method Developing Optimization (MDO)" on page 72
Tools	Setup	"Setup" on page 77
	Diagnostic	"Diagnostic" on page 88
	Maintenance	"Maintenance" on page 82
	Calibration	"Calibration" on page 86
	Options	"Options" on page 73
	Load/Unload	"Load/Unload Tab" on page 83

Status

This section shows in real time the TriPlus 300 Headspace sampling system status. See the example in Figure 28.

Figure 28. Status Conditions

A different inscription is shown depending on the actual status of the system: READY, WAITING GC READY, WAITING GC, WAITING, AUTORUN, RUNNING, PAUSE, ABORT. See the section "Device Status and Ready Conditions" on page 43 for details.

Pressing on this bar, the **Status** window appears. This window is subdivided into five tabs **TriPlus 300 HS**, **Sequence**, **Vial**, **Alarms**, and **Log**. See Figure 29.

Figure 29. Status tabs

- **TriPlus 300 HS** — Visualizes the status of the TriPlus 300 Headspace sampling system
  - When a device of the instrument such as Oven, Manifold, and Transfer Line, is not in the ready condition, the red inscription **Not Ready** appears.

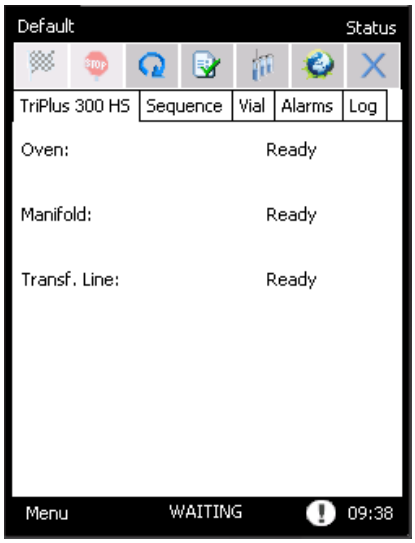

  - When the analysis is running, for each step a blue bar showing the progression of the set is displayed. In the upper part of the page a progressive status bar that indicates the elapsed time and estimated remaining time for the whole sequence appears.

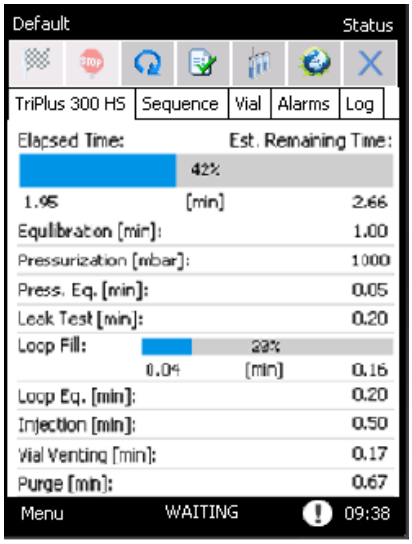

- **Sequence** — Shows the Status of the automatic sampler configured, the sequence row, vial, and current repetition.

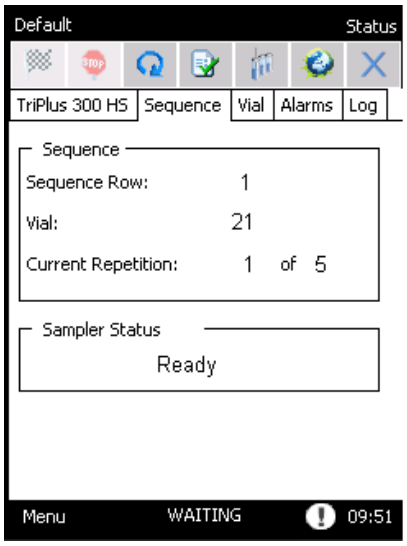

- **Vial** — Visualizes during the run the tray position of the vial in the middle of the circle in the corresponding position of the carousel.

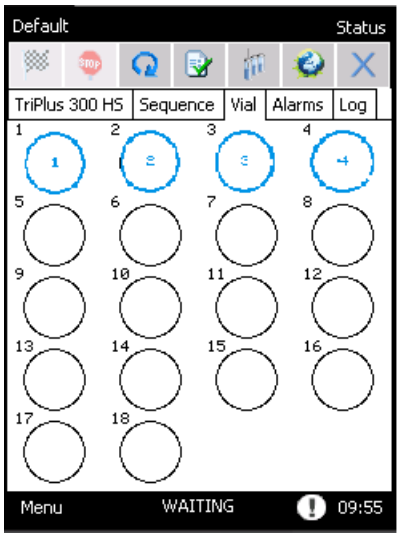

- **Alarms** — Visualizes all the messages concerning problems or advice.

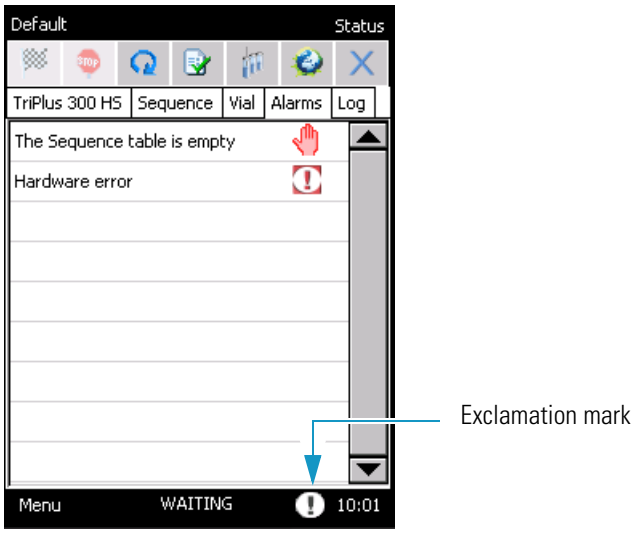

– To access this page, press the **exclamation mark** blinking on the right of the status bar. See "Alarms" on page 89.

- **Log** — Contains the information about any problems that occurred during the sampling sequences.

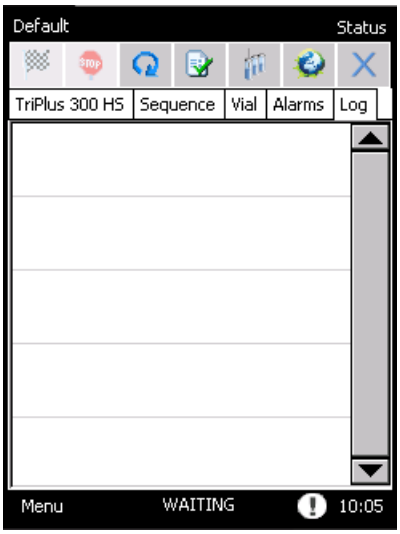

Time Clock and Date

This section allows you to read time and date. See the example in Figure 30.

Figure 30. Time and Date

When you press on the current clock (in the example 09:05), the window **Time & Date** appears. The window is subdivided into two tabs. See Figure 31.

Figure 31. Time and Date Windows

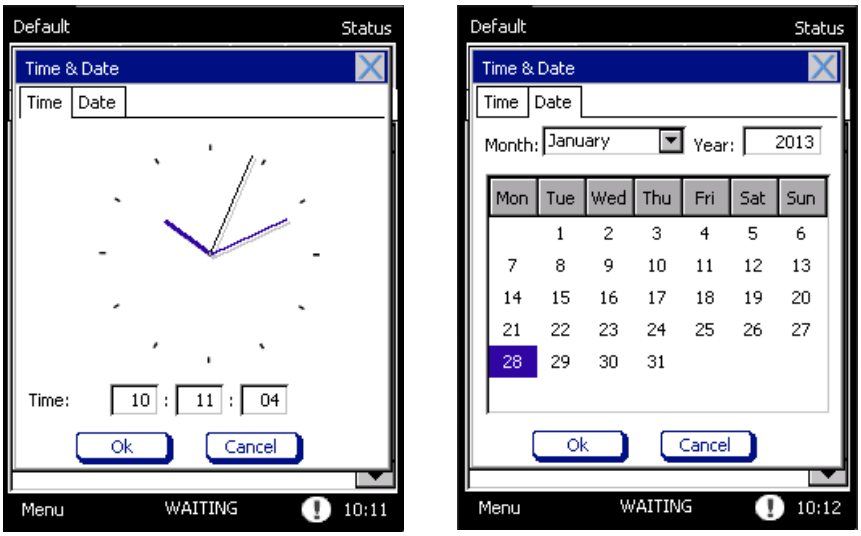

- To set the time, open the tab **Time** and enter the hour, minutes, and seconds in the three dedicated boxes.
- To set the date, open the tab **Date** and select the month, day and year.

Desktop

The desktop is the central portion of the display. See Figure 32.

Figure 32. Desktop Buttons

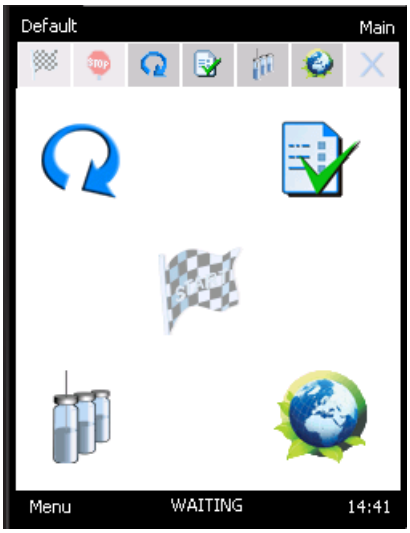

Here you find five buttons that allow to access to the following components:

- **Cycle** — See the section "Cycle" on page 49.
- **Devices Status** — See the section "Device Status and Ready Conditions" on page 43.
- **Sequence** — See the section "Sequence " on page 61.
- **Gas & Energy Saving** — See "Gas & Energy Saving Tab" on page 77.
- **Start/Stop buttons** — See the section "Control of Analysis" on page 48.

> **Note** These buttons are alternatively displayed on the desktop:
>
> - **Start** is displayed when the instrument is out of an analysis.
> - **Stop** is available when an analysis is in progress.

Tool Bar

The Tool bar is on the top of the display and consists of three parts: the Upper left side, the Upper right side, and the Lower rows. See Figure 33.

Figure 33. Tool Bar

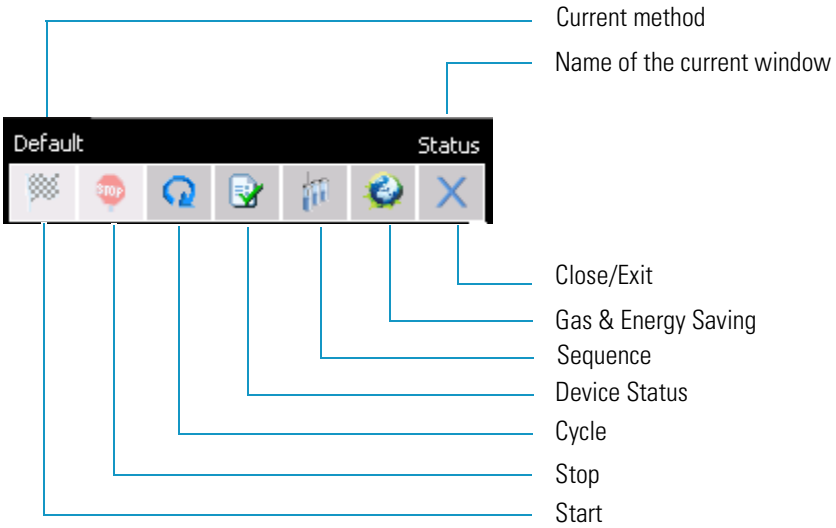

1. **Upper left side** — Displays the name of the current method. If you press on this name, the **Manage Methods** page appears. If the method is changed, it will add an asterisk following the name of the method. See the section "Method" on page 59.
2. **Upper right side** — Displays the name of the open window.
3. **Lower rows** — Includes seven shortcut keys for starting an application:
   - **Start** — Starts the analysis. See "Start of analysis " on page 48.
   - **Stop** — Stops the analysis. See "End of analysis " on page 48.

- **Cycle** — Opens the Cycle window for setting all the analytical parameters. The cycle consists of six pages:
  - Temperature
  - Equilibration
  - Pressurization
  - Loop
  - Injection
  - Others

  See the section "Cycle" on page 49 for details.

Note In order to set a parameter, press on the corresponding box and a numeric keypad appears. Digit the value and press OK.

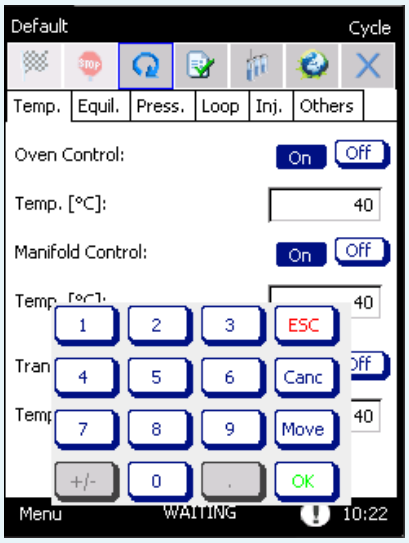

- **Device Status** — Opens the Devices Status windows, with the Temperatures and Press/Flow pages. See the section "Device Status and Ready Conditions" on page 43.
- **Sequence** — Open the sequence table window. See the section "Sequence " on page 61.
- **Gas & Energy Saving** — Opens the Gas & Energy Saving page, where select you gas and energy saving options. See the section "Gas & Energy Saving Tab" on page 77.
- **X** — Closes the current window and returns to the desktop.

Device Status and Ready Conditions

In the **Device Status** window, accessible selecting the icon, you control the actual and the set values for the listed parameters. Also, the **Ready condition** function is found.
The instrument reaches the **Ready** status when all the parameters checked for the **Ready conditions** satisfy the set conditions.

Device Status window contains two tabs: **Temperatures** and **Press/Flow**.

Temperature Tab

The parameters available in the Temperatures tab include all the devices that have a temperature regulation as **Oven**, **Manifold**, and **Transfer Line**. See Figure 34.

Figure 34. Device Status: Temperatures Tab

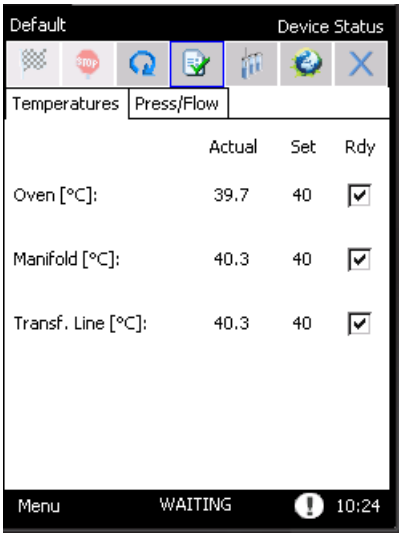

The tolerance on the ready condition is different for each device, depending on its characteristics and type of heating/cooling systems. In the **Default** method, the Ready conditions for the **Oven**, **Manifold**, and **Transfer line** temperatures are active.

Note

- To **eliminate a parameter** from the Ready condition, press on the corresponding check box and clear the selection.
- To **include a parameter** in the Ready conditions, press on the corresponding check box to display the selection.

Press/Flow Tab

In the Press/Flow tab, you find the parameters for the **Auxiliary** and **Carrier** gases. See Figure 35.

Figure 35. Device Status: Pressure/Flow Tab

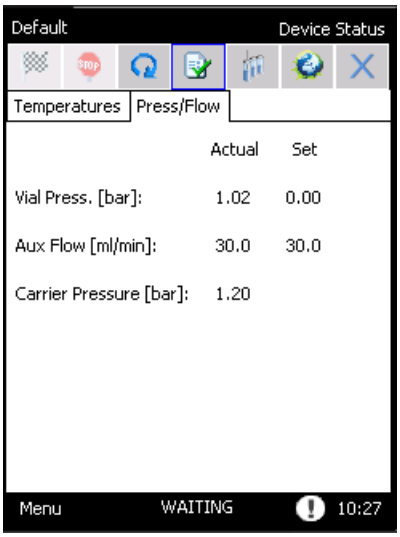

- **Carrier Pressure** visualizes the pressure of carrier gas coming from the gas chromatograph.

CAUTION If there is no carrier gas it is not possible to start the analytical sequence.

- The actual value of the **Auxiliary gas** depends on the cycle step. See "Instrument Status" on page 45 for details.
- **Aux Flow** is always visualized because the instrument controls a flow in each step, Stand-by included.

Instrument Status

This section details the status of the instrument shown on the Status bar. See also "Status" on page 37.

- **Ready** — Indicates that all the devices that are selected as ready conditions, see Ready conditions, have reached the values initially set in the method in the Cycle pages.
  The Oven, Manifold, and Transfer Line Temperatures are set in the **Temp** page and remain constant during the entire analytical cycle.
  The instrument accepts the START command only after all conditions are shown as Ready.

- **Waiting GC ready**— Shown when the gas chromatograph is not in the ready condition at the end of a sequence line, and the following line has to be started. The instrument remains in this condition until the gas chromatograph reaches the ready condition and the following line is started.
- **Waiting GC (min:s)** — Shown with the corresponding countdown when the cycle on one vial is ended and the instrument is waiting before starting the cycle on the next vial, in order to respect the GC ready interval. The cycle on the next vial will start at the end of the countdown.
- **Waiting** — Shown when one or more components are not in the ready condition, for instance when Manifold, Oven, or Transfer line are reaching the temperature values set. The instrument remains in the WAITING condition until all the parameters reach the condition set in the method. See Ready conditions.
- **Autorun** — Appears on the **Start** icon when the instrument is not in Ready status. When you press this short key, the instrument passes into **Autorun** condition. The sequence will start automatically when all ready conditions are reached.
- **Running** — Indicates that the analysis is running.
- **Pause** — Appears after a sequence is stopped and it remains until one of the possible options is selected to resume the sequence.
- **Abort** — Appears when the Abort option is selected, and is displayed until the Abort procedure is ended.

3

Operation

This chapter provides instructions for operating your TriPlus 300 Headspace sampling system.

Contents

- Control of Analysis
- Cycle
- Method
- Sequence
- Timed Events
- Method Actions
- Method Developing Optimization (MDO)
- Options
- Setup

Control of Analysis

The control of the analysis is carried out by the use of the **Start** and **Stop** buttons.

See the following related topics:

- "Start of analysis " on page 48
- "End of analysis " on page 48

Start of analysis

The analysis starts by pressing **START** positioned in the middle of the desktop, or the short key on the tool bar.
The START command determines the beginning of the sequence and will be accepted only if the instrument is in **READY** status.

If the instrument is not in Ready status, the inscription **AUTORUN** appears.
When you press the **Start** short key, the instrument passes into AUTORUN condition.
See "Instrument Status" on page 45. In this case, when all ready conditions are reached, the sequence will start automatically.

End of analysis

The analysis ends automatically when the analytical cycle for the vials in the sequence is completed. However, the analysis can be stopped before completion of the program by pressing **STOP** in the middle of the desktop, or the short key on the tool bar.

When you press STOP the instrument enters the **Pause** state and a pop-up appears.
See Figure 36.

Figure 36. Stop Sequence

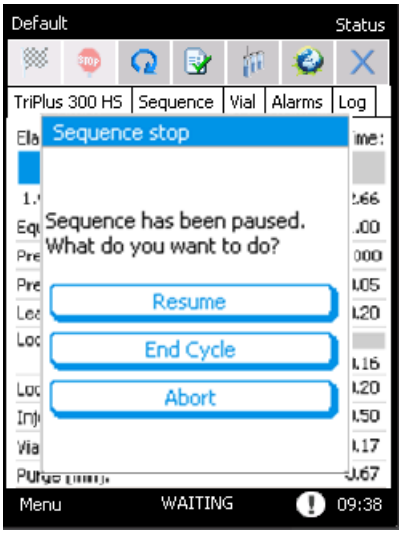

- Selecting **Resume** restarts the sequence from the point it was stopped.
- Selecting **End cycle stops** the sequence but the cycle on the current vials, or the vials still present in the carousel, will be completed.
- Pressing **Abort** interrupts both the analysis and sequence.
  If Abort is pressed when the sample has finished the equilibration phase and it is performing one of the following steps, the instrument will make a purge step to avoid that sample remains in the pneumatic circuit.

When you press **STOP** the instrument immediately stops in its current position.
The instrument will stop, or go on when one of the options is selected.

CAUTION If you press STOP while the instrument is removing one vial from the autosampler and other vials are still present in the carousel, it is possible that the vial will be kept in that position until the analysis on the vials in the carousel is ended. Finally, all the vials will be removed.
If you stop the sequence during certain critical activities, for example when the instrument is taking or releasing a vial, it is possible that the sampler will perform the removal movements twice.
These operations are necessary to preserve the correct handling of the vials and do not influence the correct overlapping of the analysis times.

At the next **START**, the sequence starts from the first repetition of the first level.
If the sequence is interrupted, the instrument returns to the conditions of the first method of the sequence.

Cycle

The analytical Cycle is composed of six steps: **Equilibration**, **Pressurization**, **Loop Fill**, **Injection**, **Vial Venting**, and **Purge**.

The Cycle window consists of six pages, four of these for the steps of the analysis and two additional pages: **Temp** for the temperature machine, **Others** to insert the GC Time, the sum of the time between gas chromatograph analysis and its cooling time, the vial size, and the **Bar Code Reader** if configured.

In the lower part of **Others** page the analysis time information is displayed the **Cycle Time** label indicates the sum of the duration of the five steps (Equilibration, Pressurization, Loop Fill, Injection and Vial Venting/Purge), and GC Time. See the section "Others " on page 56 for details.

Every value in the cycle pages is a parameter of the method, and any modification will be prompted to be saved into the method in use.

In order to set a new value for any parameter, press on the corresponding text box and use the numeric keypad to type the value. See Figure 37.

Figure 37. Cycle Page

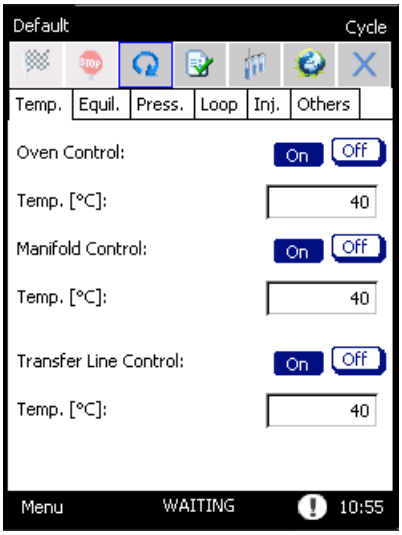

If you enter a value out of the allowed range the message **Out of range** will be shown with the indication of the correct range. The minimum or maximum value allowed will be automatically saved by pressing **OK**.

See the following related topics:

- "Temperature" on page 51
- "Equilibration" on page 52
- "Pressurization " on page 53
- "Loop Fill " on page 54
- "Injection" on page 54
- "Others " on page 56

Temperature

In this tab you find all the temperatures for **Oven**, **Manifold**, and **Transfer Line**. These parameters will be maintained for the entire analysis. To enable the temperature control click **ON** on the right side. See Figure 38.

Figure 38. Cycle: Temperature Tab

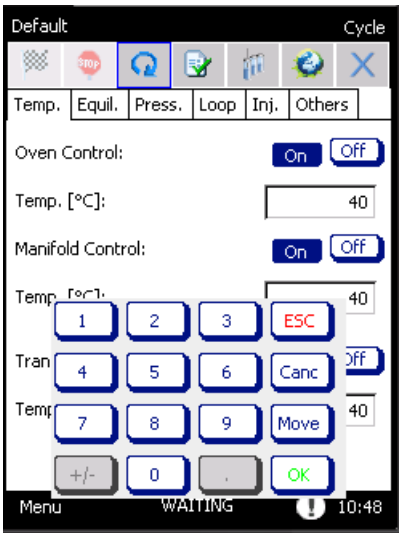

Table 2 shows the interval ranges and the default values for all the parameters:

Table 2. Temperature Parameters

Parameter	Range	Default Value
Oven Control	from 30 to 300 °C	40 °C
Manifold Control	from 30 to 300 °C	40 °C
Transfer Line Control	from 30 to 300 °C	40 °C

ATTENTION Best practice is to set the oven temperature 10 °C below the boiling point of the solvent inside the vial. Otherwise the high pressure generated inside the vial could cause the leak pressure or the explosion of the vial.

In addition, it is recommended to insert temperature values for the Manifold and Transfer Line equal or higher than the Oven temperature to avoid condensation of the sample.

Equilibration

The parameters associated with this step are: **Vial Equilibration Time** and **Shaking**. See Figure 39.

Figure 39. Cycle: Equilibration Tab

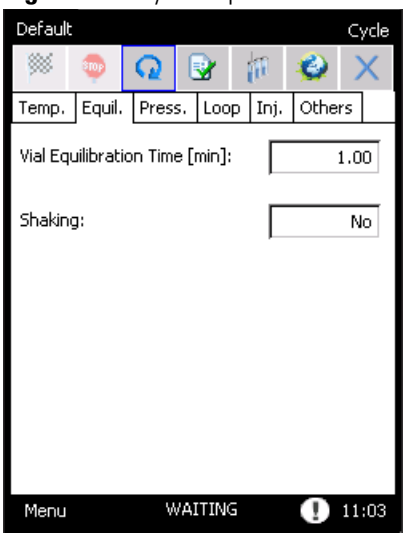

The vial equilibration time is the time during which the vial is conditioned in the oven at a fixed temperature before the pressurization starts. The incubation time is kept constant for all samples.

If the shaking option is enabled, the carousel will keep moving clockwise and counter-clockwise during the incubation in order to stir the samples.

To select the shaking option press on the drop-down menu and choose one of the four options.

Table 3 shows the interval ranges and the default values for all the parameters:

Table 3. Equilibrium Parameters

Parameter	Range	Default Value
Vial Equilibrium Time	from 0.50 to 999.00 min	0.50 min
Shaking	None, Slow, Medium, High	None

Pressurization

The parameters associated with this step are: **Mode**, **Aux Volume**, **Aux Time**, **Aux Pressure**, **Aux Flow**, and **Press. Eq. Time.**

When a **Mode** of pressurization is chosen from the drop-down menu, the other parameters in the page are activated depending on the selected mode. See Figure 40.

Figure 40. Cycle: Pressurization Tab

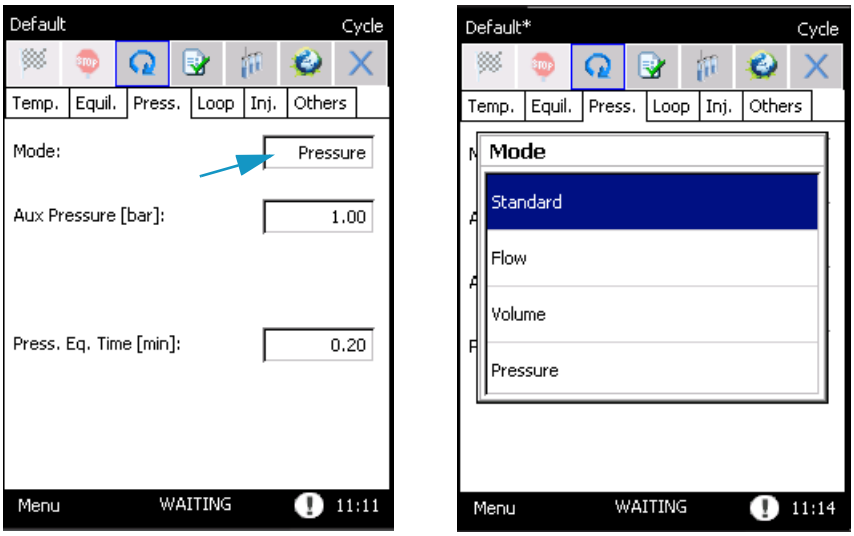

The **Press. Eq. Time** is the time for equilibrating the vial pressure after the pressurization step.

Table 4 shows the interval ranges and the default values for all the parameters:

Table 4. Pressurization Parameters

Parameter	Range	Default Value
Aux Flow	10.0 - 300.0 mL/min	30.0 mL/min
Aux Volume	1 - 90 mL	10 mL
Aux Pressure	0.20 - 4.00 bar	1.00 bar
Aux Time	0.10 - 5.00 min	0.20 min
Press. Eq. Time	0.20 - 5.00 min	0.20 min

WARNING The Volume pressurization needs a inlet auxiliary alimentation of 6 bar to work properly; for other types of pressurization an inlet pressure of 2 bar above the set value is required.

Loop Fill

The parameters associated with this step are: **Loop Fill Mode**, **Loop Pressure**, **Loop Rate**, **Loop Fill Time**, and **Loop Eq. Time**.

If the **Loop Fill Mode** is selected by the drop-down menu, the corresponding parameters appear on screen. See Figure 41.

Figure 41. Cycle: Loop Fill Tab

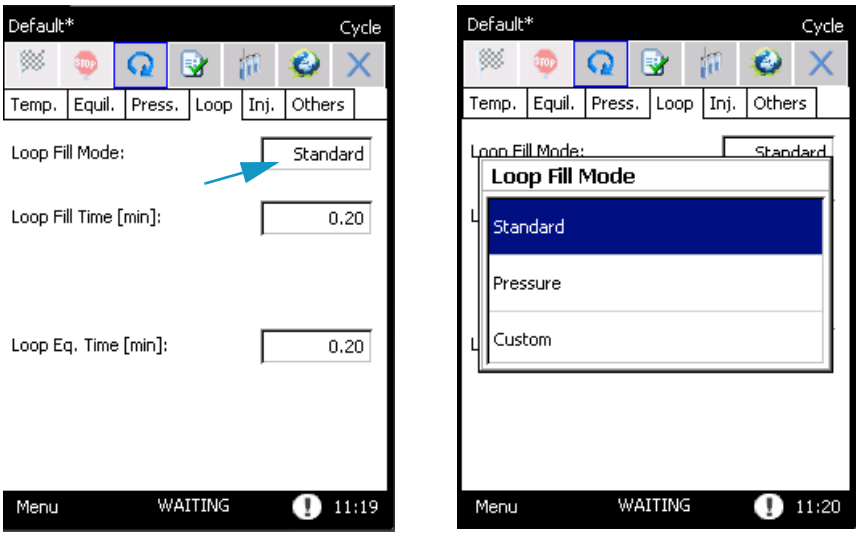

Table 5 shows the interval ranges and the default values for all the loop-fill parameters:

Table 5. Loop Fill Parameters

Parameter	Range	Default Value
Loop Pressure	0.00 - 3.50 bar	0.50 bar
Loop Rate	0.10 - 25.00 bar/min	5.00 bar/min
Loop Fill Time	0.10 - 5.00 min	0.20 min
Loop Eq. Time	0.00 - 5.00 min	0.2 min

Injection

The parameters associated with this step are: **Injection Time**, **Injection Mode**, **Vial Venting**, and **Purge**.

The **injection time** is the time of the sample transfer to the GC.

In the drop-down of the injection mode you select the type of injection: **Standard**, **MHI**, and **MHE**. See Figure 42.

Figure 42. Cycle: Injection Tab

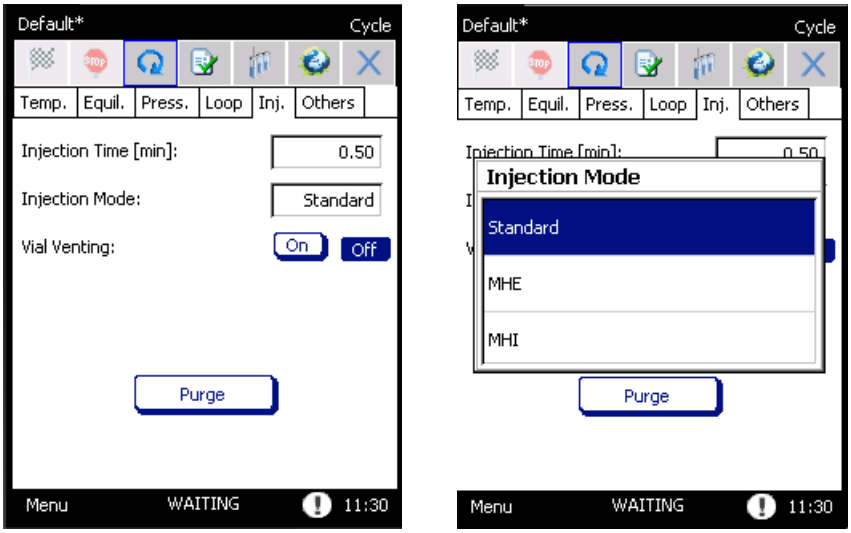

- When you choose the **MHI** mode (**Multiply Headspace Injection**) the **Injection Number** parameter will appear. It represents the number of the injections before sending the start command to the GC.
- By using **MHE** option (**Multiply Headspace Extraction**) the **Puncture** parameters will be available.

Table 6 shows the interval ranges and the default values for all the parameters:

Table 6. Injection Parameters

Parameter	Range	Default Value
Injection Time	0.10 - 999.00 min	0.50 min
Puncture	Single - Multiple	None
Injection	1 -100	2

It is also possible to set the purging parameters to clean the system after the analysis.

Selecting **ON** for **Vial Venting**, activates a standard procedure.

Pressing the **Purge** button makes a pop-up menu appear. See Figure 43.

Figure 43. Purge Parameters

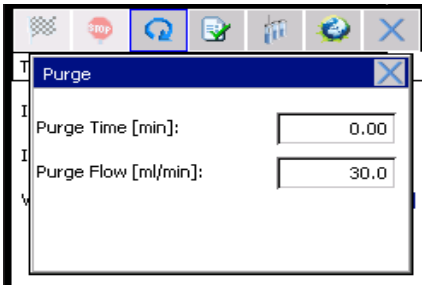

To set the flow rate of the auxiliary gas flowing in the pneumatic system and the time, insert the values in the corresponding boxes **Purge Time** and **Purge Flow**. See Table 7.

Table 7. Purging Parameters

Parameter	Range	Default Value
Purge Time	0.00 - 999.00 min	0.00 min
Purge Flow	30.0 - 300.00 mL/min	30.00 mL/min

Others

The parameters associated with this step are: **GC Time**, **Vial**, and **Barcode Reader**. See Figure 44.

Figure 44. Cycle: Others Tab

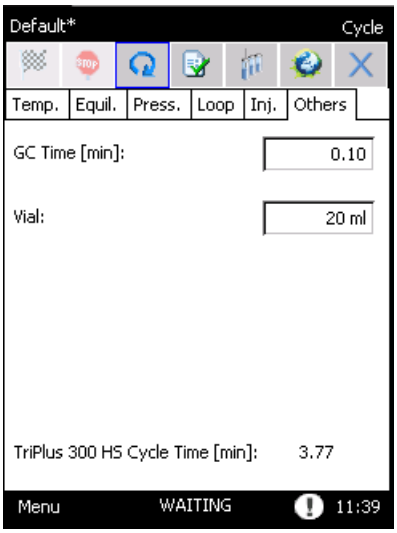

- The **GC Time** indicates the minimum time interval between two injections. Set this parameter according to the analysis duration including, in case of programmed temperature, the time needed for oven cooling. It is suggested to insert a value slightly higher to ensure the GC will be ready at the end of the sampling cycle.

  The TriPlus 300 Headspace sampling system automatically calculate the frequency at which the vials are loaded into the oven. The vial loading is optimized so that all the vials are equilibrated for the same time, and the analysis can run without inactive times.

  In the lower part on this page the **TriPlus 300 HS Cycle Time** indicates the total time of the analysis: the sum of the Cycle Time, and GC time.

- The **Vial Size** is an important parameter for the headspace analytical technique because a different vial volume can produce different analytical results.

The TriPlus 300 Headspace sampling system can work with standard 10, 20, and 22 mL headspace vials with crimped or screw magnetic caps and PTFE coated silicone rubber septa.

The Autosampler Unit automatically recognizes the size of the vial and sends this information to the Main Unit.

If there is a mismatch between the vial loaded and the vial size saved in the method, the TriPlus 300 HS system will behave as described in the **Method Sequence Options** and the message **Vial Wrong Size** will appear in the **log** page.

- The **Barcode Reader** is an optional for the Autosampler Unit. When installed you start the reading of barcodes by selecting **On** on this parameter. For details about the barcode reader see "Barcode Reader" on page 107.

Table 8 shows the interval ranges and the default values for all the parameters:

Table 8. Others Parameters

Parameter	Range	Default Value
GC Time	0.00 - 999.00 min	0.00 min
Vial Size	10, 20, 22 mL	20 mL

ATTENTION The autosampler recognizes the vial size based on its height, thus it is not be able to distinguish between vials of 20 mL and vials of 22mL with the same height.
In this circumstance the message **Vial Wrong Size** will appear if a wrong vial is used.

Vial Size	Height
10 mL	46 mm ± 0.5 mm
20 mL	75 mm ± 0.5 mm
22 mL	85 mm ± 0.5 mm

Summary

Table 9 summarizes the interval ranges and the default values for all the parameters of the Cycle page:

Table 9. Cycle Parameters (Sheet 1 of 2)

Step	Parameter	Range	Default Value
Temperature	Oven Control	from ambient +5 °C to 300 °C	40 °C
	Manifold Control	from ambient +5 °C to 300 °C	40 °C
	Transfer Line Control	from ambient +5 °C to 300 °C	40 °C

Table 9. Cycle Parameters (Sheet 2 of 2)

Step	Parameter	Range	Default Value
Equilibration	Vial Equilibrium Time	from 0.50 to 999.00 min	0.50 min
	Shaking	None, Slow, Medium, High	None
Pressurization	Aux Flow	10.0 - 300.0 mL/min	30.0 mL/min
	Aux Volume	1 - 90 mL	10 mL
	Aux Pressure	0.20 - 4.00 bar	1.00 bar
	Aux Time	0.10 - 5.00 min	0.20 min
	Press. Eq. Time	0.20 - 5.00 min	0.20 min
Loop Fill	Loop Pressure	0.00 - 3.50 bar	0.50 bar
	Loop Rate	0.10 - 25.00 bar/min	5.00 bar/min
	Loop Fill Time	0.10 - 5.00 min	0.20 min
	Loop Eq. Time	0.00 - 5.00 min	0.2 min
Injection	Injection Time	0.10 - 999.00 min	0.50 min
	Puncture	Single - Multiple	None
	Injection	1 -100	2
	Purge Time	0.00 - 999.00 min	0.00 min
	Purge Flow	30.0 - 300.00 mL/min	30.00 mL/min
Other	GC Time	0.00 - 999.00 min	0.00 min
	Vial Size	10, 20, 22 mL	20 mL

Method

A method controls the functioning of the instrument during the analytical runs. To create a method, specify all the parameters of the analytical cycle. See the section "Cycle" on page 49 for details.

When you press on the method name, the **Manage Methods** window appears. See Figure 45.

The maximum number of method that can be saved is **100**.

Figure 45. Manage methods window

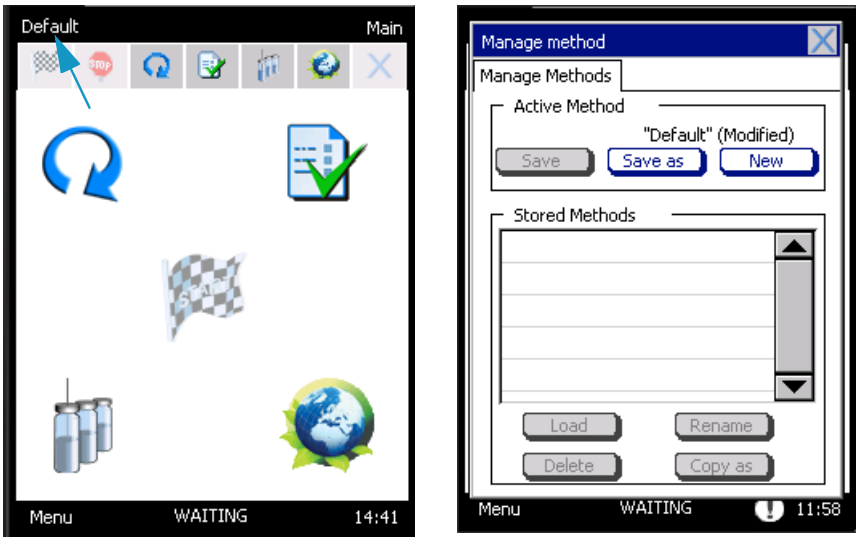

Three options are available in the dialog area **Active Method** of the **Manage Methods** window:

- **Save** — Saves the modification preserving the same name of the loaded method. This function is active if:
  - The current method has been modified.
  - The active method is different from the Default method.
- **Save as** — Saves the parameters by entering a new method name. This key is active when:
  - The instrument is not running.
  - There is still some memory space to save the method.

  An alphanumeric keypad appears in order to enter a new method name.

  Type the name and press **OK** to confirm. See Figure 46.

Figure 46. Manage Methods Window: Keypad

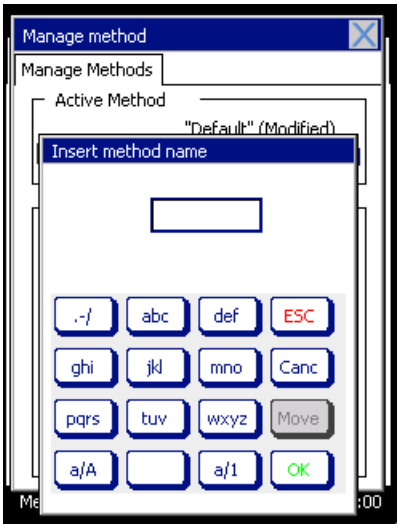

- **New** — Creates a new method starting from the **Default** method.
  This function is active if:
  - The instrument is not running.
  - There is still some memory space to save the method.

  All saved methods are listed in the frame **Stored Method**. See Figure 47.

Figure 47. Manage Methods Window: Stored Methods

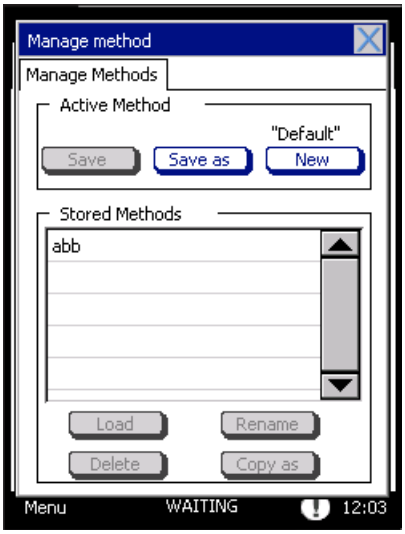

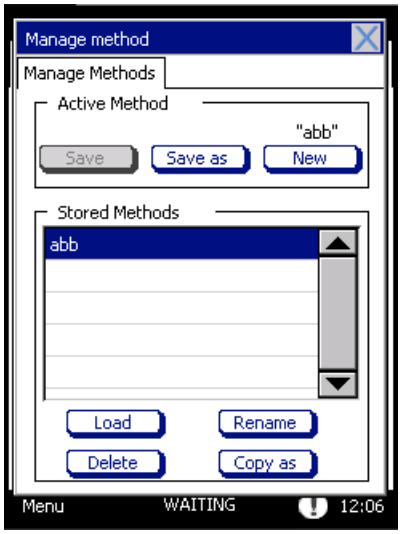

When you press on the name of the method you want to select, four options are activated:

- **Load** — Loads a method. This function is active if the current method has been modified.
  If the current method has been modified and not saved, before loading the selected method, the pop-up **Save Active Method** opens.

By answering **Yes**, the changes to the current method will be saved; by answering **No**, the changes will be lost.

- **Copy as** — Copies a memorized method and saves it with a new name. This key is activated when there is still some memory space to save the method.
- **Delete** — Eliminates a method. This function is active if the instrument is not running.

  Pressing **Delete**, a pop-up **Delete Method** is displayed. Reply **Yes** to the question if you want to eliminate the method.
- **Rename** — Changes the name of the method. The function is available when the current method has been modified.

Sequence

The **Sample Sequence** window allows all parameters concerning the sampling sequence to be set. The **Sequence** button is displayed on the tool bar, on the desktop, or you may access the **Sequence Table** by selecting **Menu**, **Autosampler**, and then **Sequence**. See Figure 48.

Figure 48. Sequence Page

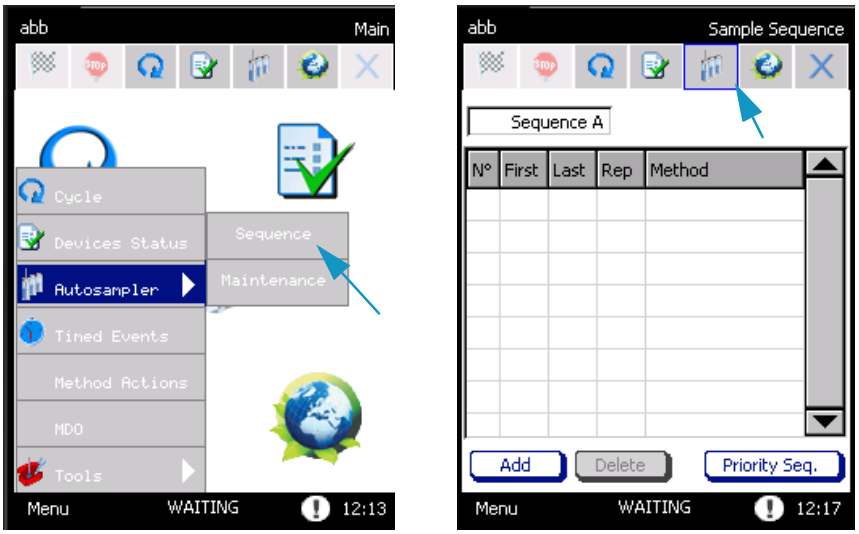

See the following related topics:

- "Creating a Sequence" on page 62
- "Changing Method Parameters During Run " on page 63
- "Changing Sequence Parameters During Run " on page 64
- "Priority Sequence " on page 64
- "Sequence Interrupted" on page 65
- "Changing Autosampler Parameters During a Run" on page 65

Creating a Sequence

To create a sequence of samples, proceed as described in the following procedure:

❖ To create a sequence

1. Press **Add** to create a new row in the table.
2. In the cells **First** and **Last** respectively enter the position of the first and the last vials to be sampled. See Figure 49.

Figure 49. Sample Sequence

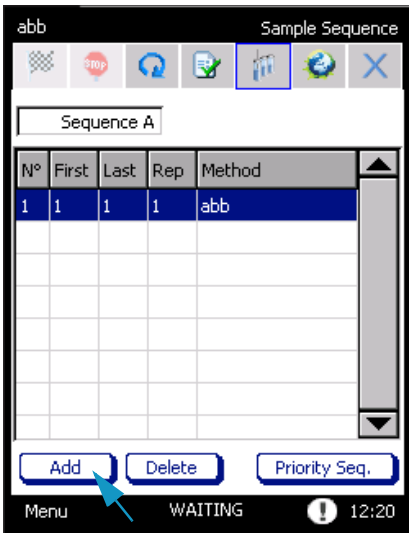

- If the number of the first vial is higher than that of the last vial, the alarm **First vial > Last vial** will appear; the vial number range is 1-120.
  An optional tray with 60 positions is available; the vial number range is 1-60.
- If you enter a value out of the allowed range, the message **Out of range** is displayed with the indication of the correct range. The minimum or maximum value allowed will be automatically saved by pressing **OK**.

CAUTION Before starting a sequence, ensure the cover of the oven is properly close to avoid any damage to the instrument.

3. In the cell **Rep**, specify the number of repetitions for each vial. The possible number of repetitions is in the range from 1 to 100. All the repetitions for the same vial will be processed before moving to the next one, and the mode of the repetition depends on the injection types you are choose.
4. By clicking on the column **Method**, all the stored methods will be shown. Select the method to be used for each sequence row. Up to five different sequences can be stored as **Sequence A**, **B**, **C**, **D**, or **E** according to the selection on the drop-down menu.
   See Figure 50.

Figure 50. Sample Sequence Drop-down Menu

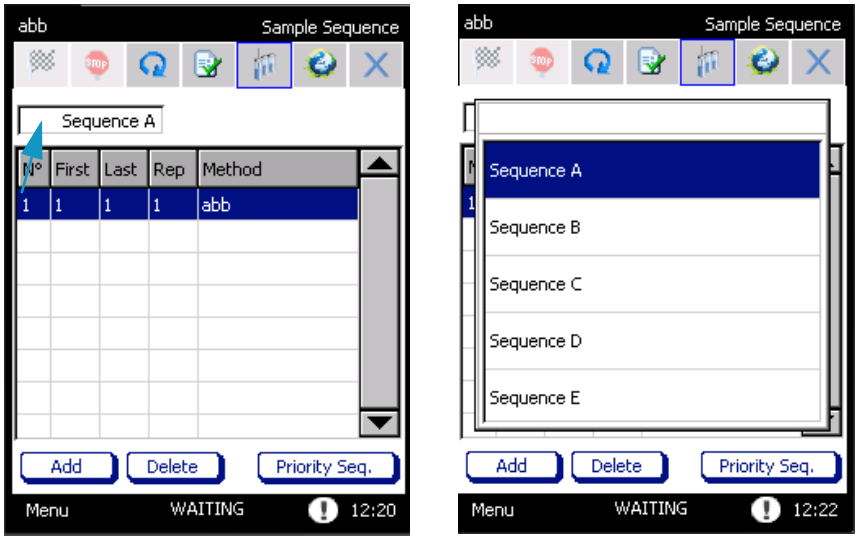

A pop-up **Load First Sequence Method** appears if the current method is different from the first sequence method.

– By pressing **Yes**, the first sequence method will be loaded.

– By selecting **No**, the first method will be loaded after pressing **START**.

Changing Method Parameters During Run

It is possible to modify some of the method parameters while a sequence is running.

❖ To change method parameters during run

1. In order to set the new value, press the corresponding box. Anumeric keypad will appear. See the example in Figure 51.

Figure 51. Method: Changing Parameters During a Run

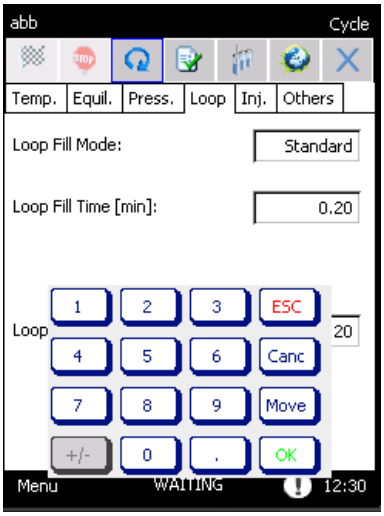

2. Enter the desired value and press **OK**.

ATTENTION If the value cannot be modified during the run, the corresponding box will be colored grey. Every modifications will be active for the next vial inserted into the carousel. When the method is modified, an asterisk is shown to the side of the method name in the upper part of the page.

Changing Sequence Parameters During Run

It is possible to modify some of the sequence parameters while the instrument is running.

❖ **Changing sequence parameters during run**

1. Press the corresponding box in order to set the new value; a numeric keypad appears. See the example in Figure 52.

Figure 52. Sequence: Changing Parameters During a Run

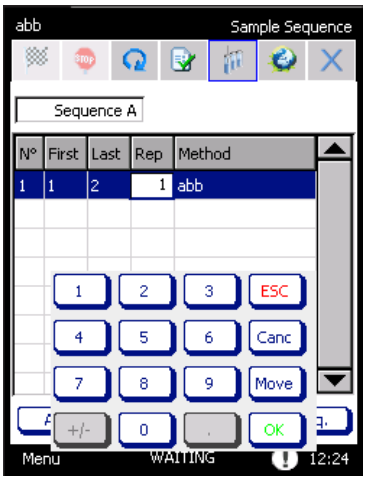

2. Enter the desired value and press OK.

ATTENTION The first vial cannot be modified during the run.
If you change the last vial, the new value will be immediately implemented.
If you change the repetition number, the new value will be active for the next vial in the carousel.

The method selected for the current row cannot be modified while the sequence is running. By pressing the corresponding box, the **Select Method** window appears.

Priority Sequence

The **Priority sequence** allows setting a sequence during the analysis. This sequence will start immediately after the end of the current analysis.

❖ **To set a priority sequence during the analysis**

1. Press the **Priority Seq.** button in order to program the priority sequence; a pop-up menu appears. See Figure 53.

Figure 53. Sequence: Priority Sequence

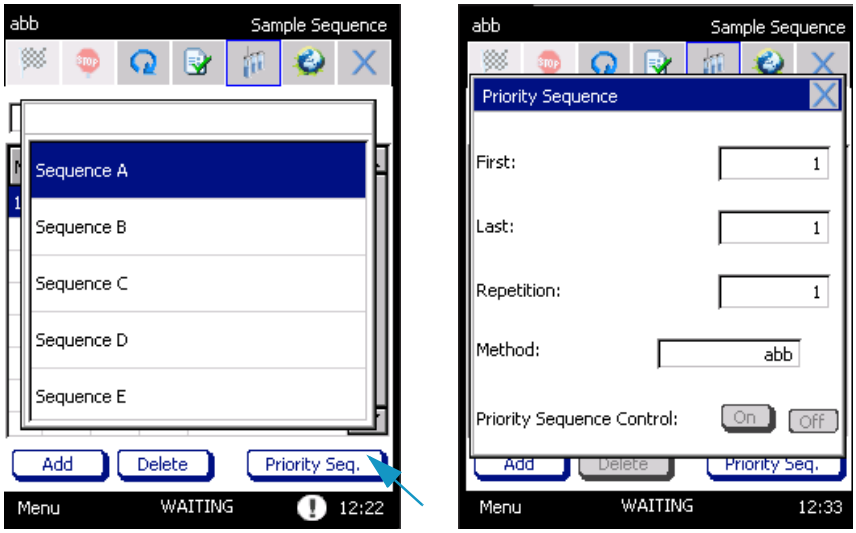

2. Insert the first and the last vial to be sampled in the corresponding boxes, the number of repetitions, and the method.

Sequence Interrupted

In case a problem occurs during a sequence and the TriPlus 300 Headspace sampling system is powered off, a message will be displayed when the instruments is powered on again.

The pop-up **Oven contains vials** appears if a sequence is stopped and some vials are present in the oven. The following message is displayed:

"The sample sequence has not been completed. Do you want TriPlus 300 HS to automatically recover vials from the oven?".

- If you select **Yes**, the vials are removed by the instrument.
- If you select **No**, you must remove the vials manually from the load/unload page, as in the case of a carousel sequence.

A hardware error will appear if the Autosampler Unit is powered off during a sequence.

Changing Autosampler Parameters During a Run

All the autosampler parameters can be modified while the sequence is running.
The changes are applied to the next sampling step.

Timed Events

This section details the timed events.

Clock Time Events

Clock time events happen at certain times on specific days, based on a real time-clock. See and Figure 54 and "Time Clock and Date" on page 40.

Figure 54. Clock Time Events

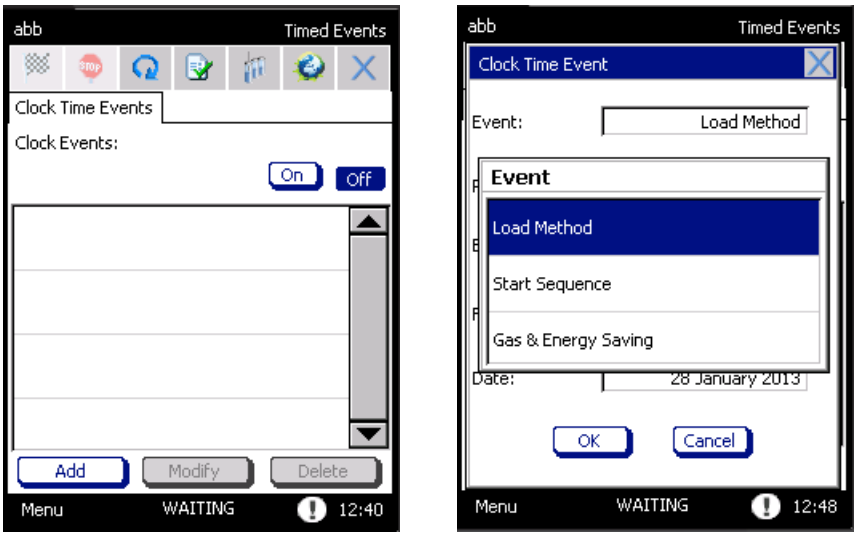

The following functions can be programmed:

- Load a method
- Start a sequence
- Gas & Energy saving

❖ To set timed events

ATTENTION All events are listed in the page **Clock Time Events**. Up to 25 events can be stored.

When you select an event, the functions MODIFY and DELETE are activated for modifying or eliminating a selecting event from the list.

1. Select **Menu > Timed Events** to access to **Clock Time Events**.

2. Open the page **Clock time events** and press **ON** to enable the clock events.

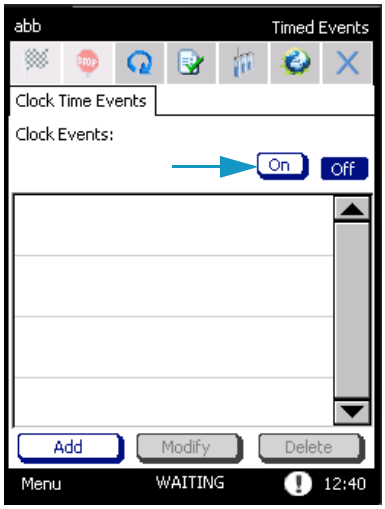

3. Click **Add**; the pop-up **Clock Time Event** appears.

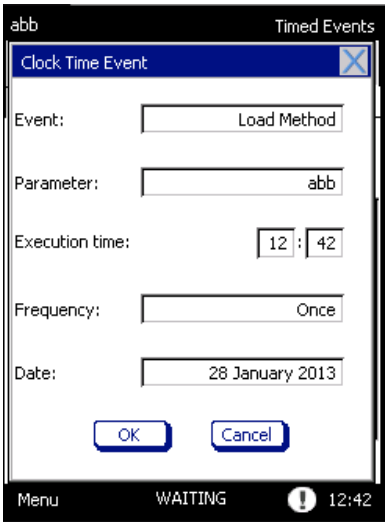

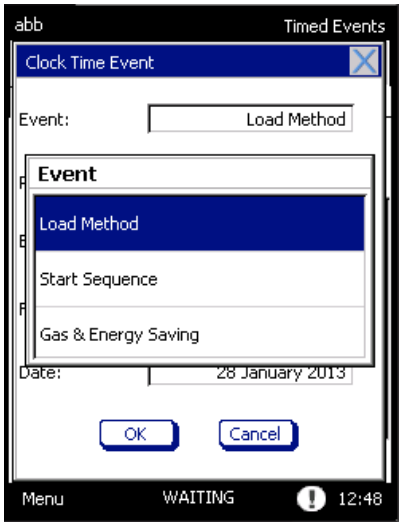

4. Select the event, the parameter (for example: the method name if the instrument must load a method, or start a method, and so on), the execution time, and the frequency.

   The available events are listed in Table 10.

   Table 10. Available Events

Event	Parameter
Load Method	Method
Start Sequence	Sequence
Gas & Energy Saving	Gas & Energy Saving

5. Use the box corresponding to **Execution time** for entering the time, based on 24-hour clock, the event must take place. See Figure 55.

   Figure 55. Clock Time Events Parameters

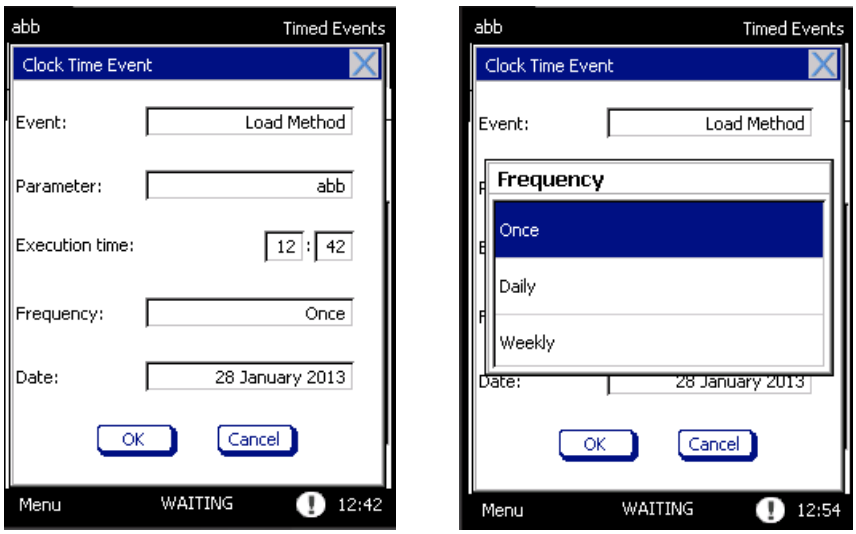

   The programming event can occur:

   - **ONCE** — Pressing on this box, a calendar will appear. Select the day, month, and year you want the event to occur.
   - **DAILY** — The event will occur every day at the selected time.
   - **WEEKLY** — Choose the day or the days of the week you want the event to happen.

Press **OK** to confirm the programming of the event.

Method Actions

The **Method Actions** are a part of the method allowing to handle certain types of TriPlus 300 Headspace sampling system or GC errors. See Figure 56.

Figure 56. Method Actions

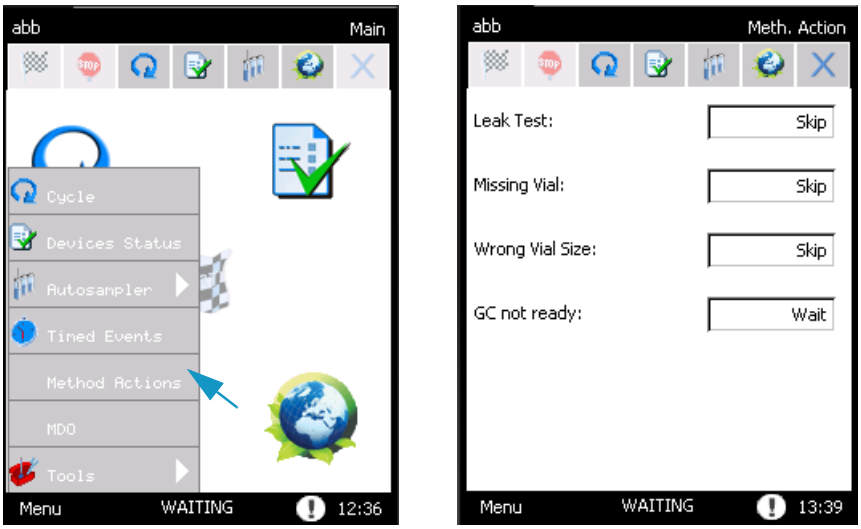

The selection of the **Method Action** parameters allows you to handle some minor issues according to the type of work you are carrying out.

The issues you can control are:

- **Leak Test** — In case of vial leak test failure during a sequence.
- **Vial Missing** — When the autosampler does not find a sample vial.
- **Wrong Vial Size** — Control of the TriPlus 300 Headspace sampling system when the loaded sample vial size does not match the vial size defined in the method.
- **GC not Ready** — The GC is not in Ready status for the new injection or at the beginning of a sequence.
- **Barcode Read Error** — When the barcode reader encounters an error while reading the barcode.

Available Actions

The available actions depend on the nature of the issue. See Figure 57.

Figure 57. Method Actions: Available Actions

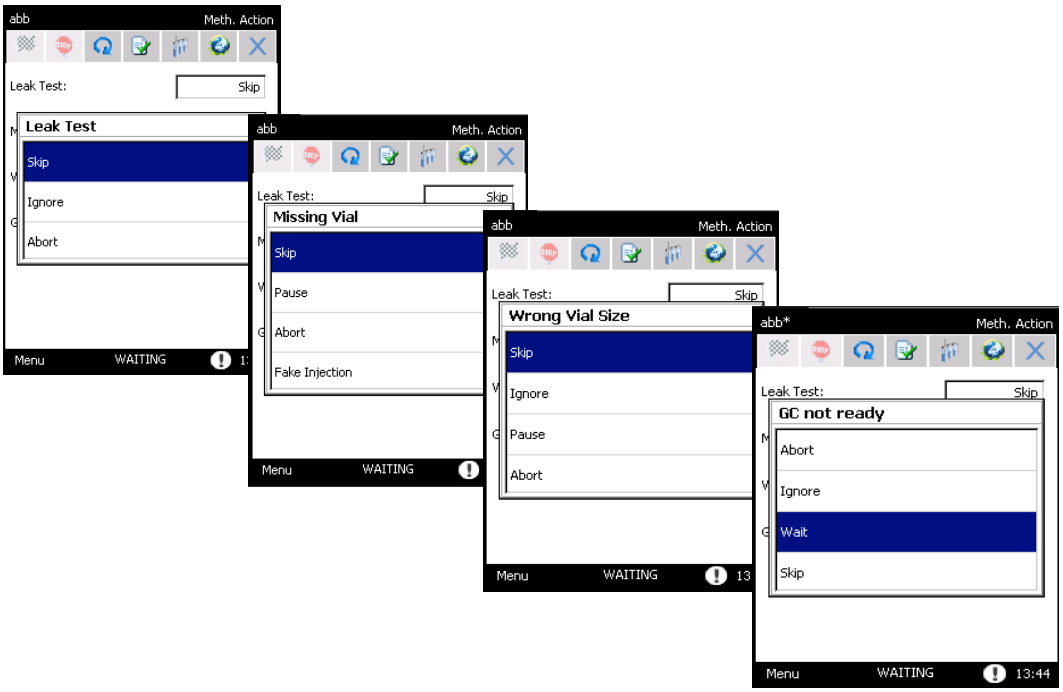

- **Skip** — The current vial and its possible repetitions are skipped, and the next vial of the sequence will be processed:
  - If the vial is already in the oven, it will be returned to the tray.
  - In the GC Ready status case, during the removal of the vial a fixed purge step (1 minute with 100 mL/min flow) will be performed.
  - In event that you insert skip as parameter on GC not Ready.
  - If the GC is not ready at the beginning of the sequence, the TriPlus 300 Headspace sampling system will wait for the GC to be ready.
- **Ignore** — TriPlus 300 Headspace sampling system continues processing of sequence.
- **Pause** — The sequence pauses. The vials in the carousel are processed.
- **Wait** — If selected in GC not Ready, the TriPlus 300 Headspace sampling system waits for the GC to be ready before injecting a sample.
- **Abort** — Aborts the processing of the current vial and the sequence. The vials inside the carousel are returned to the tray.

In case the GC is not ready at the injection time, two different events can happen, depending on the processed sequence line:

- If TriPlus 300 Headspace sampling system was processing the first line of the sequence, it will abort.
- If TriPlus 300 Headspace sampling system was processing the second or the following lines, the instruments will wait for the ready status of the GC.
-

IMPORTANT In case the actions **Pause**, **Skip** and **Wait** are used, TriPlus 300 Headspace sampling system will recalculate the times necessary for the overlapping sequence.

In this page you will find the following entries and corresponding drop-down menu for the appropriate option. See Table 11.

Table 11. Method Actions Options

Method Actions	Ignore	Skip	Abort	Waiting
Leak Test	Default	Available	Available	---
Missing Vial	---	Default	Available	---
Wrong Vial Size	Available	Default	Available	---
GC Ready Status	Available	Available	Available	Default
Barcode Reading Error	Default	Available	Available	---

When TriPlus 300 Headspace is in **Pause** status due to the control of **Missing Vial**, **Wrong Vial Size**, and **Barcode Reading Error**, a further action can be selected in the pop-up:

- For **Missing Vial**:
  - **Skip** — The autosampler skips the current vial.
  - **Repeat** — The autosampler repeats the same position. This option could be useful for inserting the missing vial and re-starting the sequence.
  - **Abort** — The sequence aborts.
  - **Fake Injection** — The missing vial undergoes a fake injection.
- For **Wrong Vial Size**:
  - **Skip** — The vial is returned to the tray, and the next one will be processed.
  - **Resume** — The autosampler restarts the sampling.
  - **Abort** — The sequence aborts.

Method Developing Optimization (MDO)

The Method Developing Optimization (MDO) function empirically determines the same parameters that provide the best optimization for your needs in order to create a method that extracts sufficient samples to be analyzed.
This procedure increments a parameter as temperature, equilibration time, shaking level, injection number in MHI mode, by a set amount in consecutive runs.

MDO Parameters

Select **Menu | MDO** to access MOD window. See Figure 58.

Figure 58. Method Developing Optimization

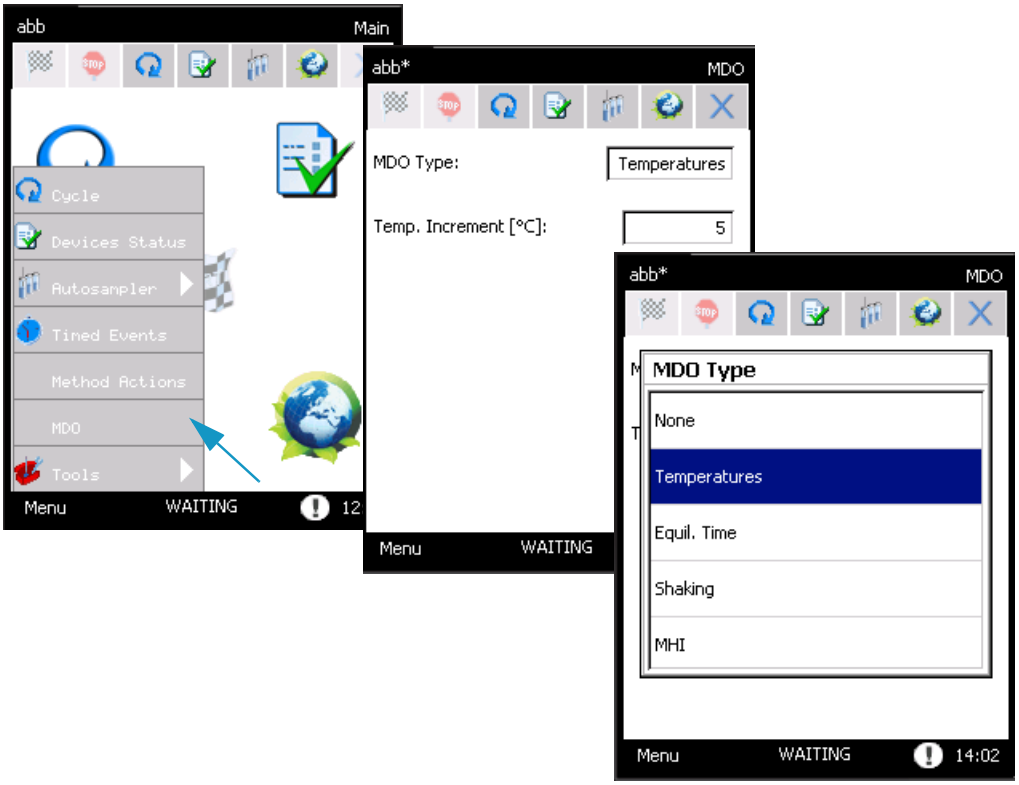

All the parameters that can vary during the optimization are listed in a drop-down menu:

- **Temperature** (°C) — All thermal zones increment by the same amount.
  This value is inserted in the corresponding text box. If a heated zone reaches or would exceed its maximum temperature, it will hold its maximum temperature for any remaining vial.
  Increasing the temperature can improve the peak areas of the sample, and increases the throughput of the analysis.
  It is important not exceed the boiling point of the sample compounds or solvent. Moreover, when working at high temperatures the sample might be degraded, or transfers more solvent.

Using the temperature MDO option, the sequence is carried out in overlap mode because each vial has a different incubation temperature, and must be individually equilibrated.

- **Equilibration Time** (min) — Increments the equilibration time for each analysis. When increasing the equilibration time, consider that more solvent could be introduced or the sample could be degraded
- **Shaking** — For each analysis, the instrument sets an increasing shaking level. When the TriPlus 300 Headspace sampling system reaches the highest level of shaking, this is maintained for all subsequent vials. The shaking benefits samples with a larger amounts of liquid, liquid samples with high viscosity, and analytes with high partition coefficients K.
- **MHI** (Multiple Headspace Injection) — If you select the MHI parameter, a text box indicates where to insert the increments of the injection number. Increasing the number of injections permits enrichment of the sample into the GC injector or trap.

Options

Select **Menu > Tools > Options** to access Options page. In this page you find information on different options. See Figure 59

Figure 59. Options Page

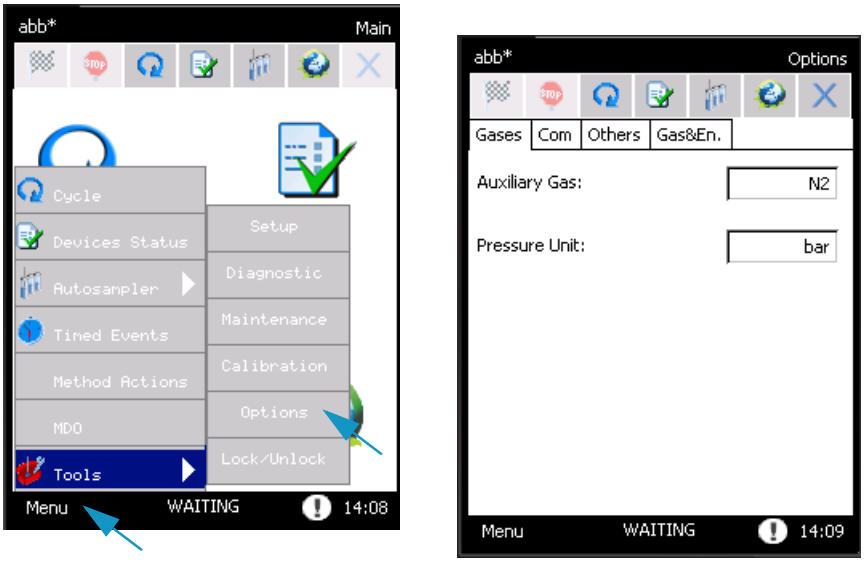

The page is subdivided into four tabs:

- "Gases Tab" on page 74
- "Com Tab" on page 74
- "Others Tab" on page 76
- "Gas & Energy Saving Tab" on page 77

Gases Tab

In this tab you select the options related to the auxiliary gas and carrier gas. See Figure 60.

Figure 60. Options Page: Gases Tab

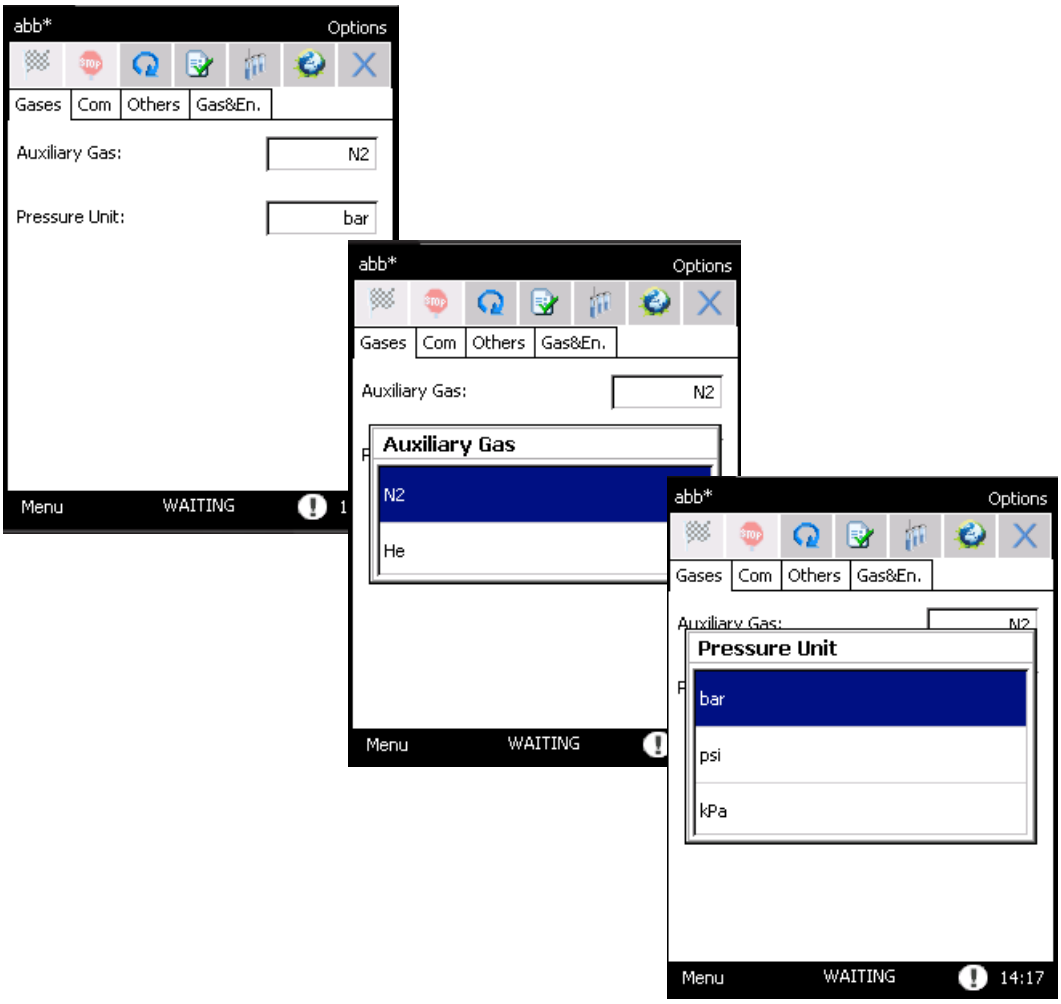

- **Auxiliary Gas** — The auxiliary flow rate displayed depends on the type of gas used (Nitrogen or Helium).
- **Pressure Unit** — In this text box you select the pressure measurement unit. The units available are: bar, psi and kPa. The default unit is bar. All set values will be automatically converted.

Com Tab

This tab contains all the parameters to connect the TriPlus 300 Headspace sampling system to the software. See Figure 61.

Figure 61. Options Page: Com Tab

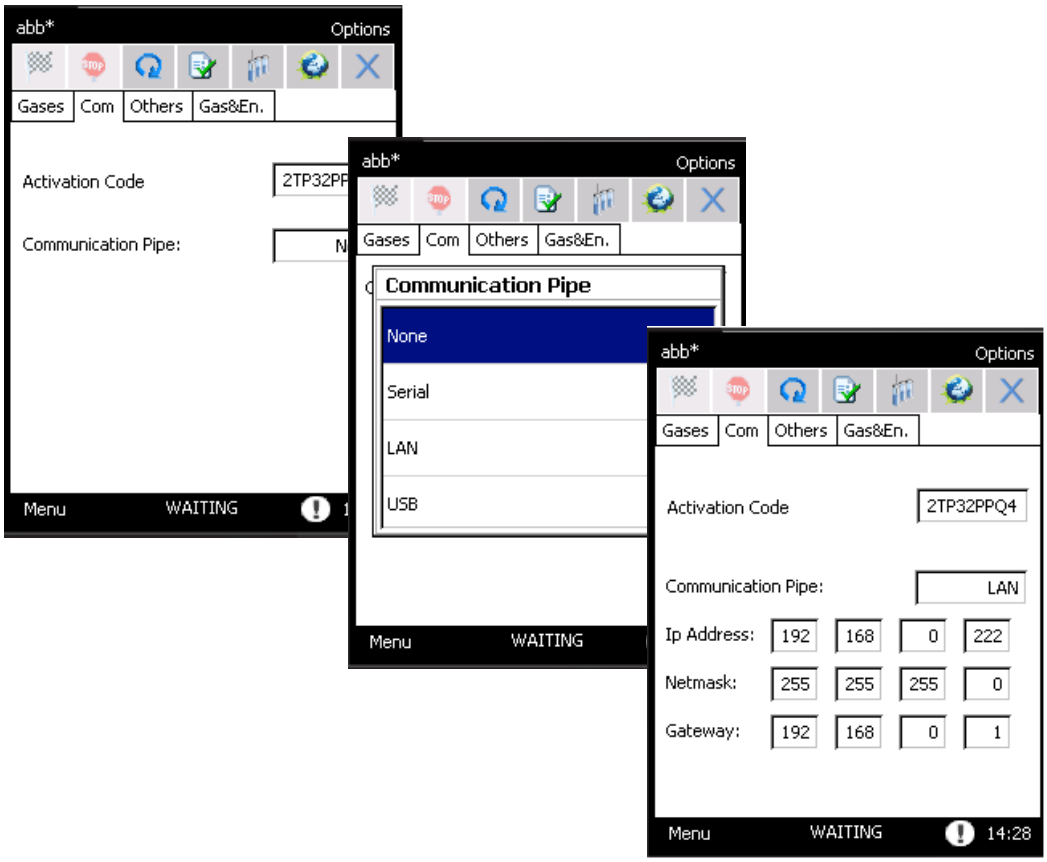

- **Activation Code** — A specific code must be entered in the Activation code box to control the TriPlus 300 Headspace sampling system through the software. This code is strictly correlated to each software license and it is reported in the documentation provided with the package.
  - If the Activation code is not inserted a red message appears:

    "Enter the right Activation code to enable the communication with the Acquisition system"
  - If the Activation code is wrong, a red message appears:

    "Enter the right Activation code to enable the communication with the Acquisition system"

    In this case the communication with software control driver is not enabled.
- **Communication Pipe** — The TriPlus 300 Headspace sampling system can communicate to a PC through three communication types: USB, LAN. or RS232. Besides, the analog output is available for all the detector signals. Select the communication pipe type through the pop-up window.
  - **None** — Select this option to disable communication.

– **Serial** — Select this option to connect the serial port 1 or 2 to a COM port of the PC through a RS232 serial cable. This communication type is suggested only for service.

> **IMPORTANT** This type of communication has lower performance than USB and LAN and thus is only provided as an alternative for situations where USB and LAN communication are not applicable.

– **USB** — This is the easiest communication pipe to configure a point to point between PC and TriPlus 300.

> **IMPORTANT** If this option is selected, connect the USB cable only after installing the driver.

– **LAN** — Use the LAN communication type to connect one or more instruments to a single computer through a hub. A static IP address is required.
With a default subnet mask, the first three numbers must be the same as the GC and PC address. The last number must be different for each instrument connected to the LAN port.

Others Tab

The Others tab contains two parameters. See Figure 62.

Figure 62. Options Page: Others Tab

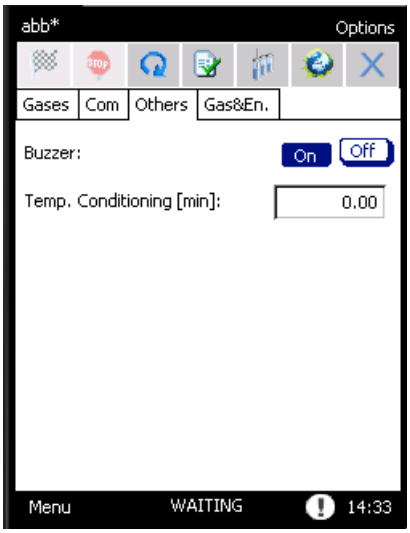

- **Buzzer** — This option enables or disables the buzzer of the TriPlus 300.
- **Temp. Conditioning** — Use this function to set a conditioning time, expressed in minutes, for the devices to be heated, in order to obtain a higher stable temperature. This parameters refers to the lapse of time for the heated zones to equilibrate after reaching their setpoint, before a vial is loaded.

Gas & Energy Saving Tab

This tab is available through the button on the tool bar, at the top of the screen, on the desktop, or in option. It enables gas saving for the auxiliary gas and carrier gas if configured, and energy savings by switching off the heaters and deactivating the touch screen. See Figure 63.

Figure 63. Options Page: Gas & Energy Saving Tab

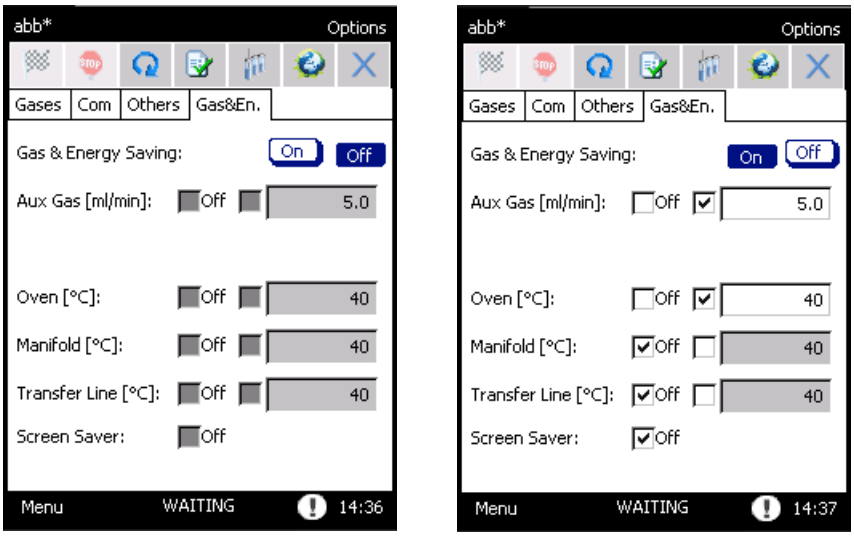

The selected parameters will be activated after 10 minutes of complete inactivity of the machine and the **Gas & Energy** levels will be shown on the Status Bar.

You can set a flow or temperature value in the text box on the right side, or deactivate them with the OFF check mark.

When the TriPlus 300 Headspace sampling system is in **Gas & Energy Saving**, a pop-up menu will appear asking if you would like to deactivate the saving control.

If you select **Yes**, the control is deactivated, if you select **No** the window will disappear and the TriPlus 300 Headspace sampling system will stay in saving mode. When the Screen Saver is activated, click on the touch screen to see the pop-up menu, and then choose if you want to keep this mode.

Setup

This page allows you to set the specific configurations for each instrument. This task is performed at the factory or by Thermo Fisher Scientific technical personnel during instrument installation.

All setup parameters are accessible through the standard password 1111, and preferably managed by Thermo Fisher Scientific technical personnel to avoid unintentional modifications.

To access the Setup page select **Menu | Tool | Setup**. Press **Unlock**, then insert **1111** as a password, and press **OK**. See Figure 64.

Figure 64. Setup Page

The page is subdivided into four tabs:

- AS Tab
- Remote Tab
- Others Tab
- Carrier Tab

AS Tab

In this tab the **Tray Capacity** of the sample tray installed on the Autosampler Unit is set. Choose 60 or 120 accordingly. See Figure 65.

Figure 65. Setup Page: AS Tab

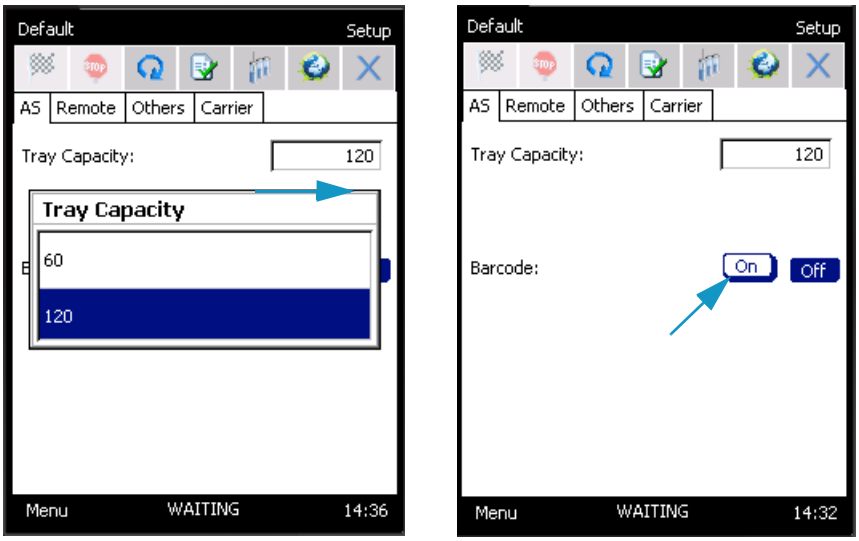

If the Barcode reader is present select **On**, otherwise select **Off**.

Remote Tab

In this tab the **Read In** and **Start Out** signals are set. See Figure 66 and "Setting the Communications" on page 24.

Figure 66. Setup Page: Remote Tab

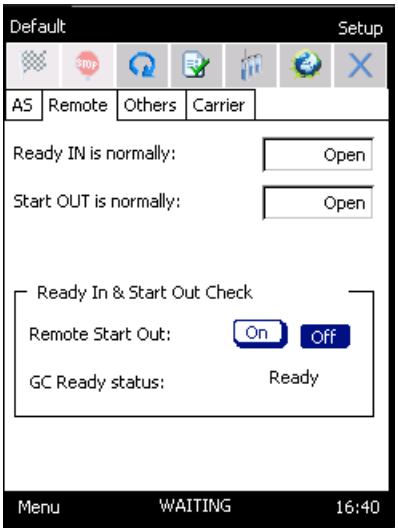

Others Tab

In this tab the Carrier gas is enabled (On) or disabled (Off). See Figure 67.

Figure 67. Setup Page: Others Tab

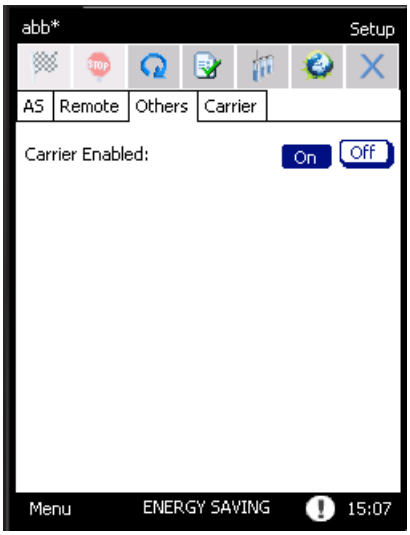

Carrier Tab

In this tab the control of the Carrier gas is set among **GC, Headspace**, and **GC+Headspace**. See Figure 68.

Figure 68. Setup Page: Carrier Tab

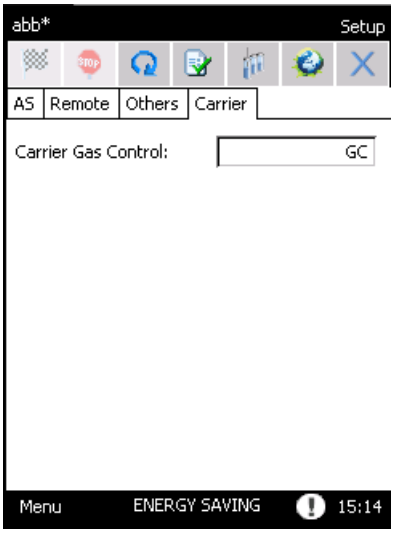

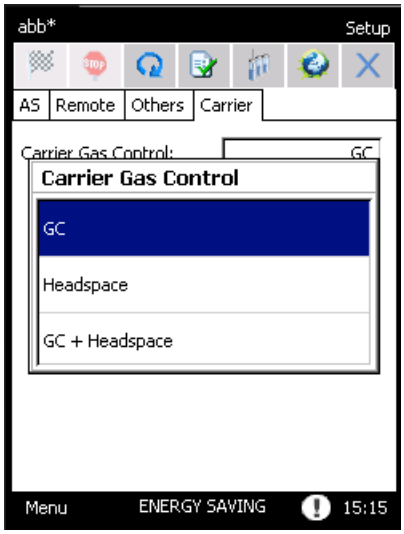

4

Maintenance, Parts Replacement, and Diagnostic

This chapter provides guidelines for maintaining the TriPlus 300 Headspace sampling system, and performing its diagnostics.

Contents

- Maintenance
- Calibration
- Diagnostic
- Lock/Unlock Page
- External Cleaning of the TriPlus 300 Headspace Instrument
- Replacing the Transfer Line Needle
- Replacing the Sampling Needle
- Handling Precautions
- Installing the HS Adapter Kit on the SSL/SSLBKF Injector

Maintenance

To access the Maintenance section, press **Menu | Tools | Maintenance**. See Figure 69.

Figure 69. Maintenance Page

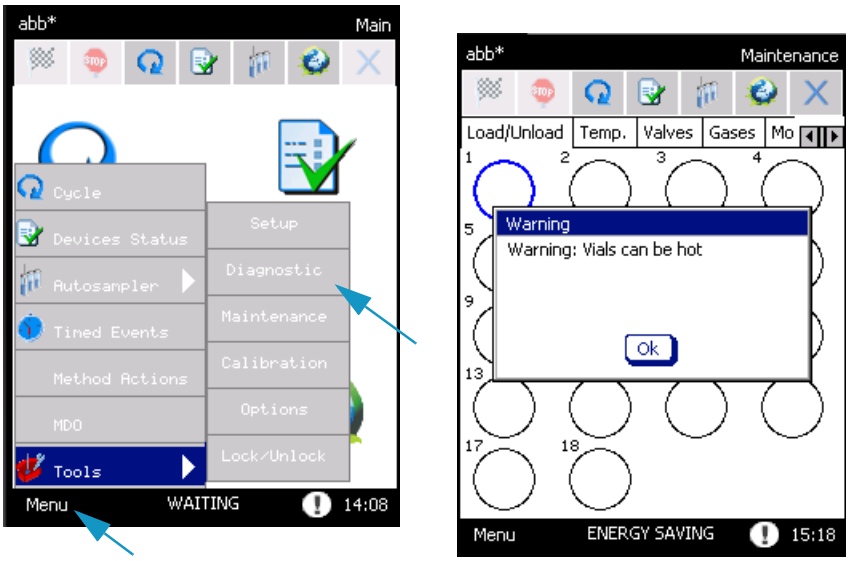

The Maintenance window includes six tabs for maintaining the instrument maintenance:

- Load/Unload Tab
- Temperature Tab
- Valves Tab
- Gases Tab
- Movements Tab
- FW Update Tab

ATTENTION These tabs are accessible through a password, and preferably managed by Thermo Fisher Scientific trained technical personnel. You can only access to the **Load/Unload** tab. See "Load/Unload Tab" on page 83.

Load/Unload Tab

In the load/unload page you move the carousel and the Insertion and Sampling lifter in order to load vials without using the Automatic sampler. See Figure 70.

Figure 70. Maintenance Page: Load/Unload

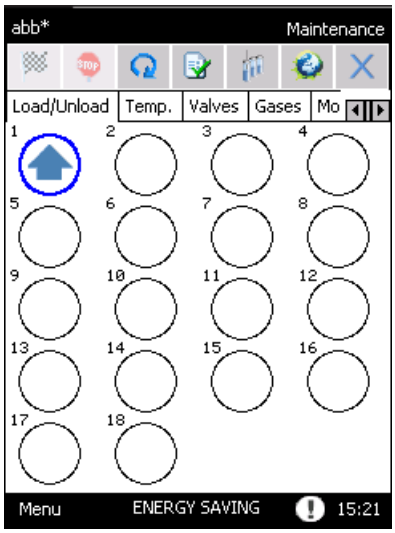

Temperature Tab

In this tab you can change the temperatures setpoints. See Figure 71.

Figure 71. Maintenance Page: Temperature Tab

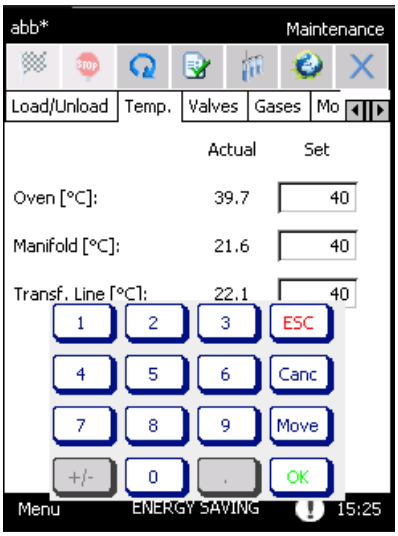

Valves Tab

In this tab you may change the valves setting. See Figure 72.

Figure 72. Maintenance Page: Valves Tab

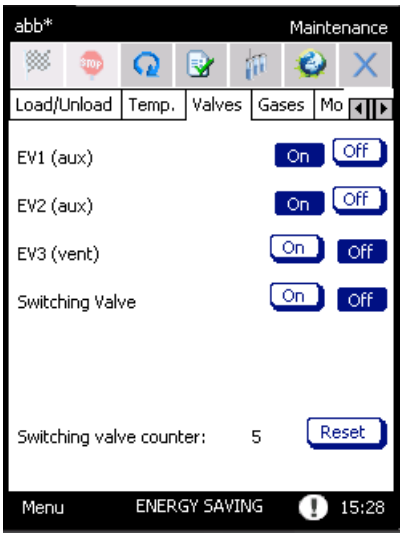

Gases Tab

In this tab you may change the gases setting. See Figure 73.

Figure 73. Maintenance Page: Gases Tab

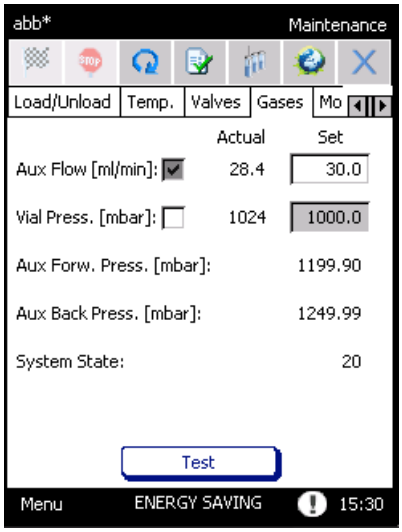

Movements Tab

In this tab you may change the movements of the carousel. See Figure 73.

Figure 74. Maintenance Page: Movements Tab

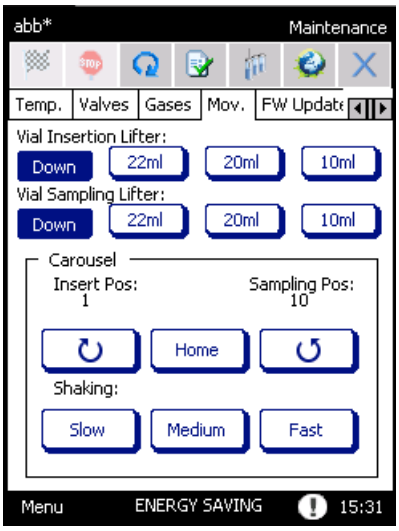

FW Update Tab

In this tab you may update the firmware of the TriPlus 300 Headspace sampling system. See Figure 75.

Figure 75. Maintenance Page: FW Update Tab

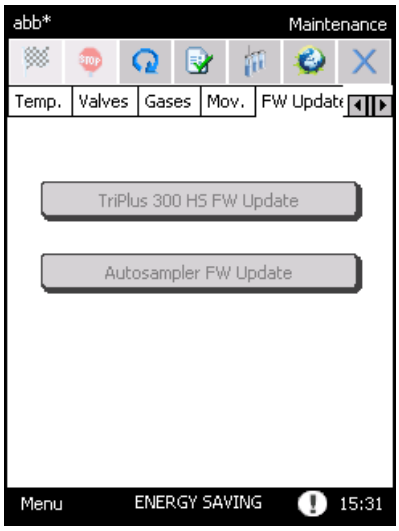

Calibration

To access the Calibration section, select **Menu | Tools | Calibration**. See Figure 76.

Figure 76. Calibration Page

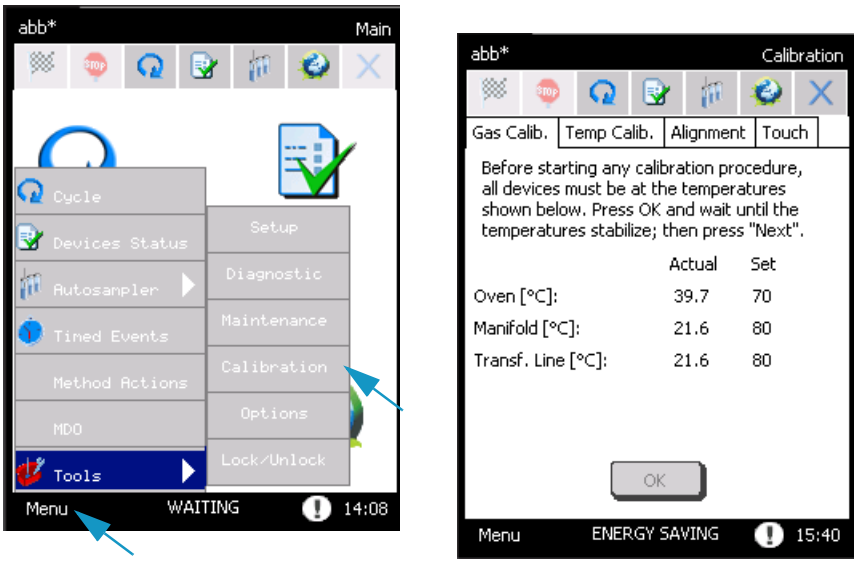

ATTENTION The **Gas calibration**, **Temperatures Calibration**, and **Alignment** tabs are accessible only through a password and preferably managed by Thermo Fisher Scientific trained technical personnel. You may only access to the **Touch** tab. See Touch Screen Calibration .

Note The gas calibration is performed at factory or during the instrument installation, using nitrogen as auxiliary gas.

Touch Screen Calibration

You can calibrate the touch screen in order to make it suitable to your finger.

❖ **To calibrate the touch screen**

1. Open the page **Touch** and press the button **Calibrate touch screen**. See Figure 77.

   Figure 77. Touch Screen Calibration (1)

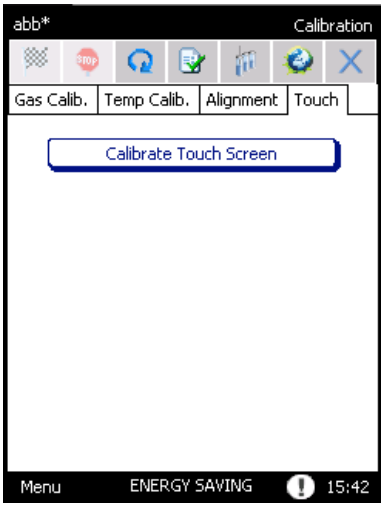

2. A series of circles will be displayed. Press at the middle of each circle. See Figure 78.

   Figure 78. Touch Screen Calibration (2)

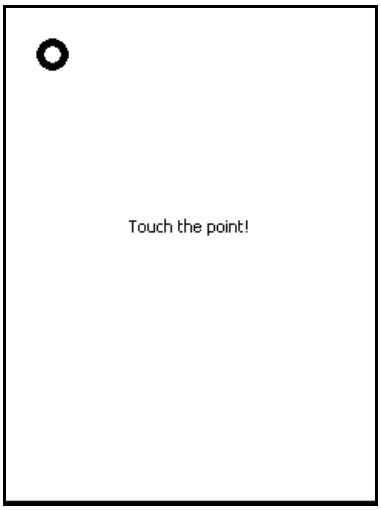

3. At the end of this procedure the message **Congratulation your touch screen has been calibrated** appears.
4. Press the **touch screen** again to continue.

- Use the original packing to transport the instrument. Do not turn the instrument upside down.

Diagnostic

To access the Diagnostic section, select **Menu | Tools | Diagnostic**. See Figure 69.

Figure 79. Diagnostic Page

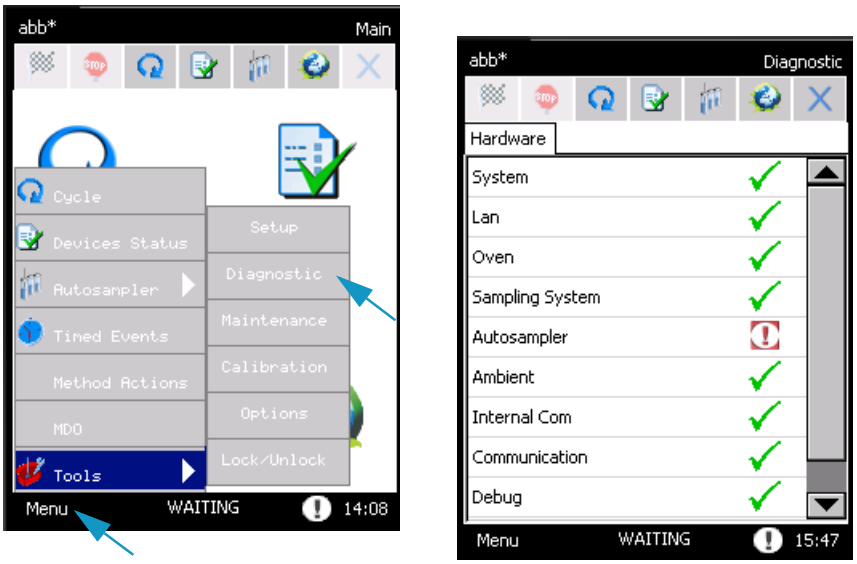

This section provides information about the diagnostics of the instrument. The related topics are:

- "Hardware" on page 88
- "Alarms" on page 89

Hardware

When the instrument is powered on, a **Self test** is performed to check that the instrument is functioning correctly. During this procedure, all the configured devices are checked one by one. At the end, the **Hardware** tab of the diagnostic page shows all the devices in a list. If the device passes the test, a ✓ symbol appears.

- If a device fails the test, an exclamation mark appears. If you press on the device's name, a pop-up menu appears reporting detailed information about the device, its malfunctioning, or both.

The **Diagnostic** page can be entered any time after the self test. To access to Diagnostic page select **Menu | Tools | Diagnostic**.

The first item in the list is **System**. You can read the serial number of the instrument, the firmware version of the Main Board, and the other controllers.

Alarms

When the control unit diagnoses an error, an exclamation mark blinks on the status bar near the time clock.

Select the icon to display the **Alarms** page, where the alarm messages are listed. See Figure 80.

Figure 80. Alarms Page

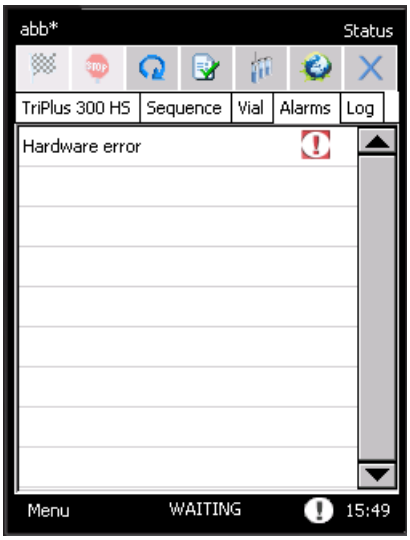

If you press on the row, a pop-up menu appears containing details on the problem and, in most cases, the instructions for to solve it.

The errors can be divided in:

- **Blue hand alarms** — Indicates an error concerning a wrong setpoint.
  In this case the START of the analysis is not blocked. See "Blue Hand Alarms" on page 90.
- **Red hand alarms** — Indicates an error that could cause serious damages.
  In this case the START of the analysis is blocked. See "Red Hand Alarms" on page 90.

Hardware Errors indicate a malfunction of the instrument. They are visualized by a red hand, with the message **Hardware error**. Refer to the **Diagnostic** page for details.
If these problems occur, it is preferable to call Thermo Fisher Scientific technical personnel.

Blue Hand Alarms

The Blue hand alarms are listed in Table 12.

Table 12. List of Blue Hand Alarms

Message	Error	Description	How to Solve It
Load Method	A method parameter was not found in the flash memory. The corresponding default value has been loaded.	The default value of the parameter has been loaded.	Modify the value of the parameter in the method. See "Cycle" on page 49.
Load Sequence	A sequence parameter was not found in the flash memory. The corresponding default value has been loaded.	The default value of Sequence Nr.Seq, Column [row] has	Modify the sequence parameter in the analysis table. See "Sequence " on page 61.

Red Hand Alarms

The Red hand alarms are listed in Table 13.

Table 13. List of Red Hand Alarms (Sheet 1 of 3)

Message	Error	Description	How to Solve It
Sequence: First Out Of Range	The First vial in a sequence row is out of range, because you switched between autosampler sequences and carousel sequences.	Rows: 1, … Range 1...18	Modify the First vial in the Analysis Table. See "Sequence " on page 61.
Sequence: Last Out Of Range	The Last vial in a sequence row is out of range, because you switched between autosampler sequences and carousel sequences.	Rows: 1, ... Range 1...18	Modify the Last vial in the Analysis table. See "Sequence " on page 61.

Table 13. List of Red Hand Alarms (Sheet 2 of 3)

Message	Error	Description	How to Solve It
Sequence: First vial > Last vial	You selected a first vial > than last vial.	Rows: 1, … First vial > Last vial	Modify the First and Last values in the Analysis table. See "Sequence " on page 61.
Analysis table is empty	There are no entries in the Analysis table.	No entries in analysis table	Insert at least a line in the Analysis table. See "Sequence " on page 61.
Carrier Gas Pressure too low	The carrier gas pressure is below the 50 mbar threshold.	Carrier gas pressure below threshold	Check carrier gas supply and check for possible leaks.
Autosampler Disconnected	TriPlus 300 Headspace sampling system lost communication with the autosampler, or the autosampler was shut down during a sequence.	The autosampler is disconnected, check wiring and power cycle it.	Check the autosampler wiring and power cycle it.
Log message	A problem occurred during a sequence and a new message was displayed in the log file.	Log file has a new message.	Check the log file in the Status page. See "Status" on page 37.
Hardware error	It indicates a malfunction of the instrument.	See **Diagnostic** page.	See **Diagnostic** page for details; if necessary contact the Technical Support.
Carousel Error	Carousel lost its position or a hardware failure occurred.	Carousel lost position or hardware failure.	Cycle the power for the TriPlus 300 Headspace sampling system. If the problem persists contact the Technical Support.

Table 13. List of Red Hand Alarms (Sheet 3 of 3)

Message	Error	Description	How to Solve It
Insertion Lifter Error	Insertion lifter lost its position or a hardware failure occurred.	Insertion Lifter lost position or hardware failure.	Cycle the power for the TriPlus 300 Headspace sampling system. If the problem persists contact the Technical Support.
Sampling Lifter Error	Sampling lifter lost its position or a hardware failure occurred.	Sampling Lifter lost position or hardware failure.	Cycle the power for the TriPlus 300 Headspace sampling system. If the problem persists contact the Technical Support.
Switching Valve Error	Switching valve lost its position or a hardware failure occurred.	Switching Valve lost position or hardware failure.	Cycle the power for the TriPlus 300 Headspace sampling system. If the problem persists contact the Technical Support.

Lock/Unlock Page

To access the Lock/Unlock section, select **Menu | Tools | Lock/Unlock**. See Figure 81.

Figure 81. Lock/Unlock Page

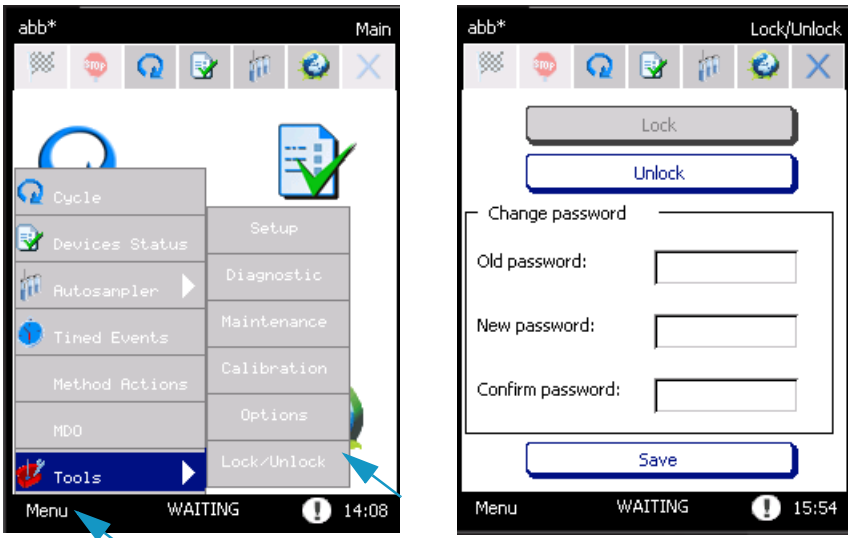

In this page you can lock or unlock the touch screen by pressing the relevant button.

When the **Unlock** button is pressed, the system requires a password. Type the password to unlock the touch screen.

If you want, you may change the password and save it by pressing the **Save** button.

External Cleaning of the TriPlus 300 Headspace Instrument

WARNING The external cleaning must be performed with the instrument off and the power cord disconnected. Avoid using solvents and spraying anything on the electrical parts. For the removal of possible dangerous substances (toxic, harmful, and so on), read the hazard indications and information reported in the Safety Sheet supplied by the manufacturer referring to the relevant CAS (Chemical Abstract Service) number. Use proper protective equipment.

❖ To clean the exterior the TriPlus 300 Headspace Instrument

1. Clean the instrument on the outside with a water and soap solution or with a household non-abrasive product. Pay special attention when cleaning the back side of the sampling unit. Do not spray anything, but clean using a cloth imbued with the cleaning solution.
2. .Dry with a clean cloth.

If you suspect that any substance used for cleaning or submitted to analysis may have entered the instrument, though it is very unlikely, immediately switch off the instrument and call the authorized Technical Service personnel for proper action.

Replacing the Transfer Line Needle

The transfer line needle is connected to the line by a fitting and a stainless steel ferrule.

❖ To replace the transfer line needle

1. Disconnect the power supply cord before opening the instrument.
2. Use a 7 mm wrench to support the fitting and with another 7 mm wrench unscrew the needle.
3. Replace the needle and tighten the fitting until sealed. It is not necessary to replace the stainless steel ferrule on the tube.
4. Check the seal by closing the tube outlet, for example with a septum, and pressurizing the carrier gas line.

Replacing the Sampling Needle

To replace the sampling needle proceed as follows:

❖ **To replace the sampling needle**

1. Disconnect the power supply cord before opening the instrument.
2. Insert the Teflon seal in the upper part of the new needle and the Kalretz™ O-ring in the lower part. Insert the new needle in the holder pushing it from the upper part.
3. Reassemble the needle holder on the manifold, paying attention that the needle enters the guide positioned in the lower part of the manifold.
4. Reassemble the screw that blocks the needle holder to the manifold and tighten it.
5. Replace the tubing entering the manifold from the right side. Use a 7 mm wrench to tighten the fitting.
6. Replace the fitting in the upper part of the manifold and tighten it with an 8 mm wrench.
7. Replace the tubing entering the manifold from the upper part and use a 7 mm wrench to tighten the fitting.
8. Close the cover of the aluminum box that contains the manifold and the switching valve and tighten the screw located in the left side of the box.
9. Put the cover back on the front part and secure it with the screw located on side.

Handling Precautions

If it is necessary to move the instrument, the following precautionary measures should be taken:

- Remove the vials from the carousel.
- Remove the needle from the transfer line.

Installing the HS Adapter Kit on the SSL/SSLBKF Injector

This section provides the instructions for installing the HS Adapter kit on the TRACE 1300 Series GC SSL/SSLBKF injectors for the use with a TriPlus 300 Headspace sampling system. See Figure 82.

Figure 82. HS Adapter

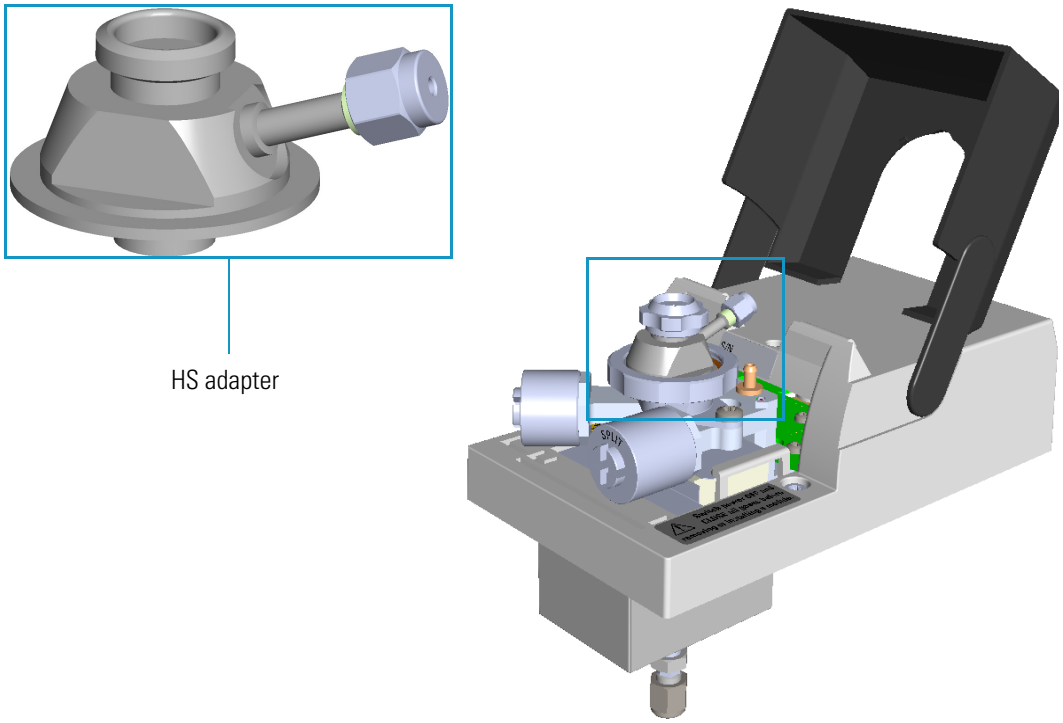

❖ **To install the HS adapter:**

1. Put the TRACE 1300 Series GC in standby condition.
2. Cool the oven, injector, and detector to room temperature.

   Note By pressing the **Maintenance** button, the GC cool down is automatically carried out.

3. Close the gas supplies.
4. Power off the GC.
   a. Push down the power switch (breaker), located at the back of the instrument, to the position O.
   b. Unplug the power cable from the AC Input connector into the back of the GC and from the wall outlet.
5. Remove the column end from the injector and the detector.
   a. Open the front door of the GC.

b. Loosen the retaining nut from the injector fitting on the upper interior wall of the GC oven.

c. Remove the analytical column with its nut and ferrule from the bottom of the injector.

d. Remove the analytical column with its nut and ferrule from the bottom of the detector.

6. Remove the SSL/SSLBKF injector module from its seat.

   a. Open the module flap cover.

   b. Using a T20 Torxhead screwdriver, unscrew the three captive fixing screws.

   c. Lift the module from its seat in the injector housing. Place the SSL/SSLBKF module on a clean surface.

WARNING Make sure the o-ring remains into its seat on the gas connection.
Do not install the module if the o-ring is missing.

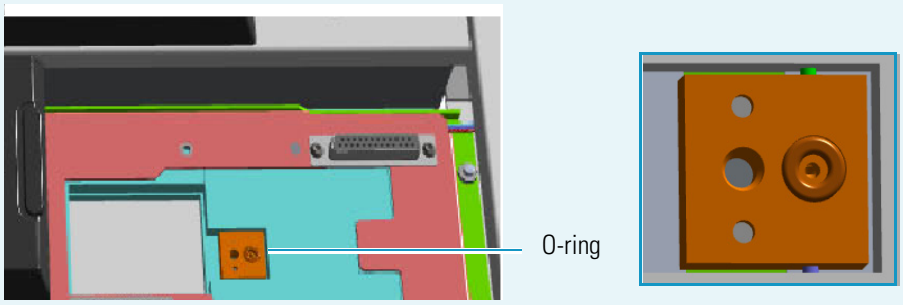

7. Replace the module flap cover with the one's provided. See Figure 83.

Figure 83. Module Flap Cover for the HS Adapter

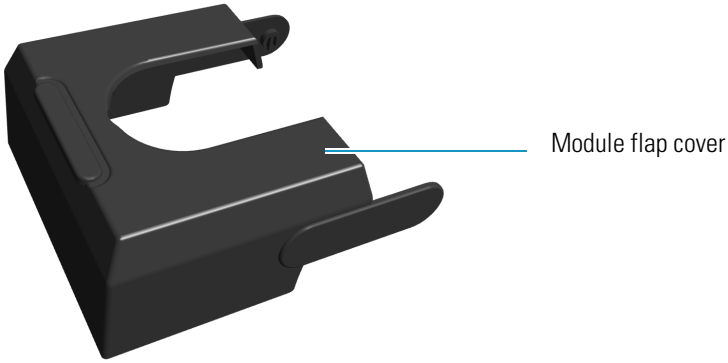

8. Reinstall the injector module into the main frame.

   a. Open the module flap cover.

   b. Place the injector module in its seat. Be sure to insert the 25-pin male connector, on the bottom of the module, into the 25-pin female connector on the injector seat of the injector housing.

c. Use a T20 Torxhead screwdriver to tighten the three captive fixing screws without overtightening.

CAUTION To maintain the correct alignment the screws must be tightened in turn. Tighten each screw only a small amount before moving to the next screw. Repeat until all are secure.

9. Remove the top parts of the injector. See Figure 84.

Figure 84. Injector Top Parts Removal

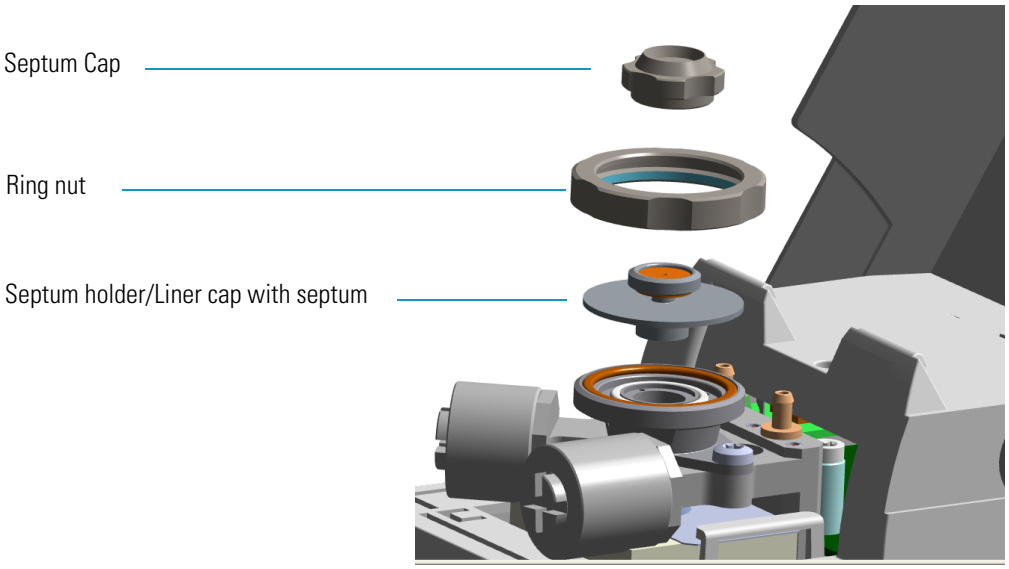

a. Unscrew the septum cap of the injector.

b. Unscrew the ring nut.

c. Remove the septum holder/liner cap with septum from the injector body head.

10. Replace the liner.

IMPORTANT We suggest replacing the liner currently installed into the injector with the HS/SPME straight glass empty liner P/N 453A1335.

a. Use tweezers to remove the current liner with the liner seal (o-ring) from the injector.

CAUTION Be careful not to break the glass liner when removing it. Glass splinters might fall into the lower part of the vaporization chamber.

b. Holding the HS/SPME liner with tweezers, place a new liner seal over the liner.

c. Insert the liner into the injector and push it gently towards the bottom of the injector.

11. Install the HS adapter on the top of the injector. See Figure 85.

Figure 85. HS Adapter (1)

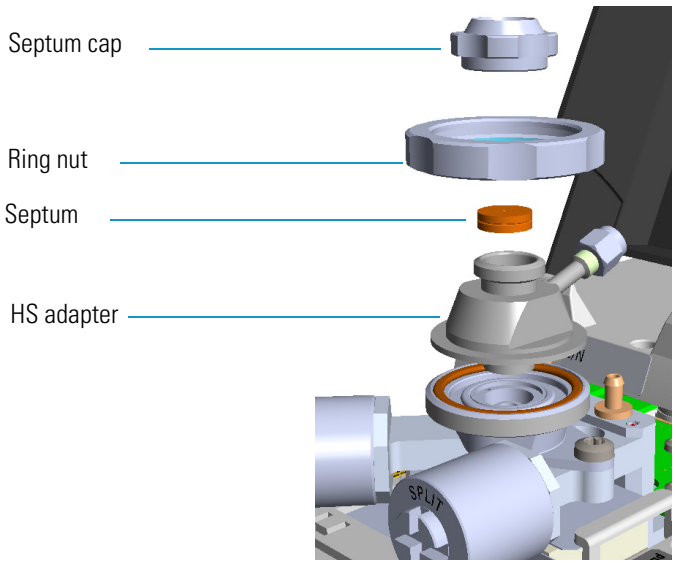

a. Avoid touching the septum with your fingers. Insert a new septum into the septum holder cavity of the HS adapter using tweezers. See Figure 86.

Figure 86. HS Adapter (2)

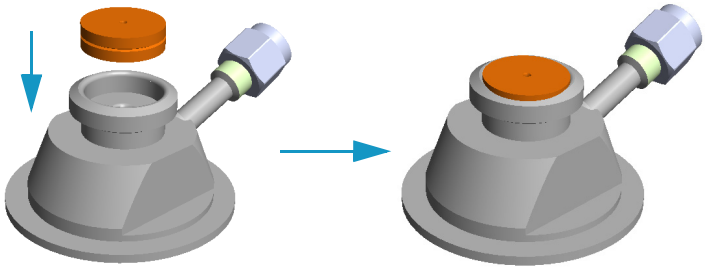

b. Place the HS adapter with the septum on the body head of the injector. See Figure 87.

Figure 87. HS Adapter (3)

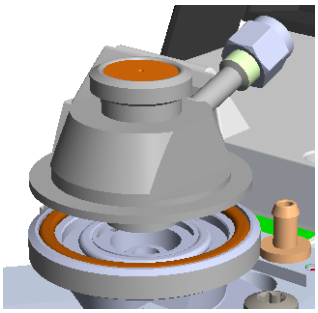

c. Guide the ring nut on the HS adapter with the septum, then fix it by screwing in the ring nut. See Figure 88.

Figure 88. HS Adapter (4)

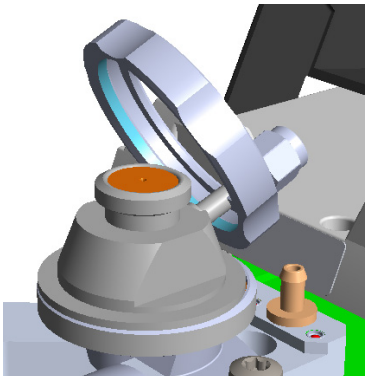

12. Close the module flap cover.
13. Connect the carrier gas line coming from the TriPlus 300 Headspace sampling system to the HS adapter by using the proper nut and ferrule. See Figure 89.

Figure 89. HS Adapter (5)

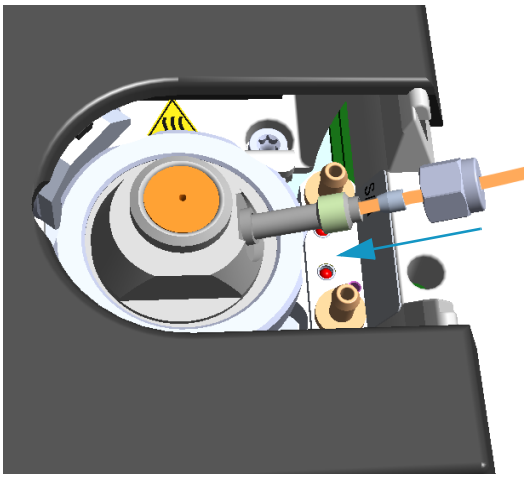

14. Screw and finger-tighten the septum cap provided. See Figure 90

Figure 90. HS Adapter (6)

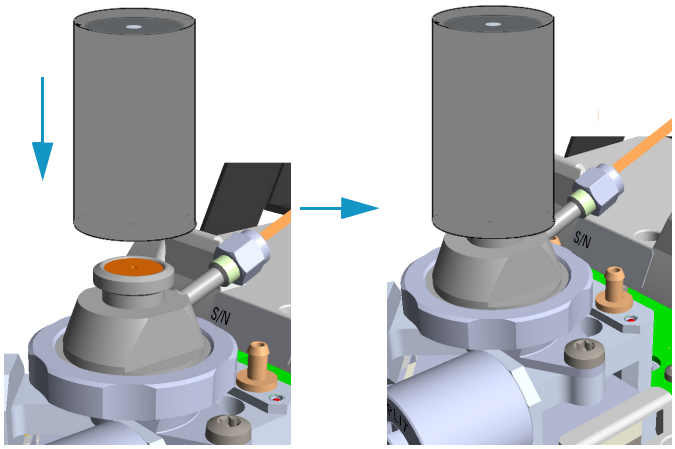

CAUTION Do not overtighten the septum cap because you might damage the septum and affect instrument performance.

15. Insert the transfer line needle into the septum cap. See Figure 91.

Figure 91. Transfer Line Connection

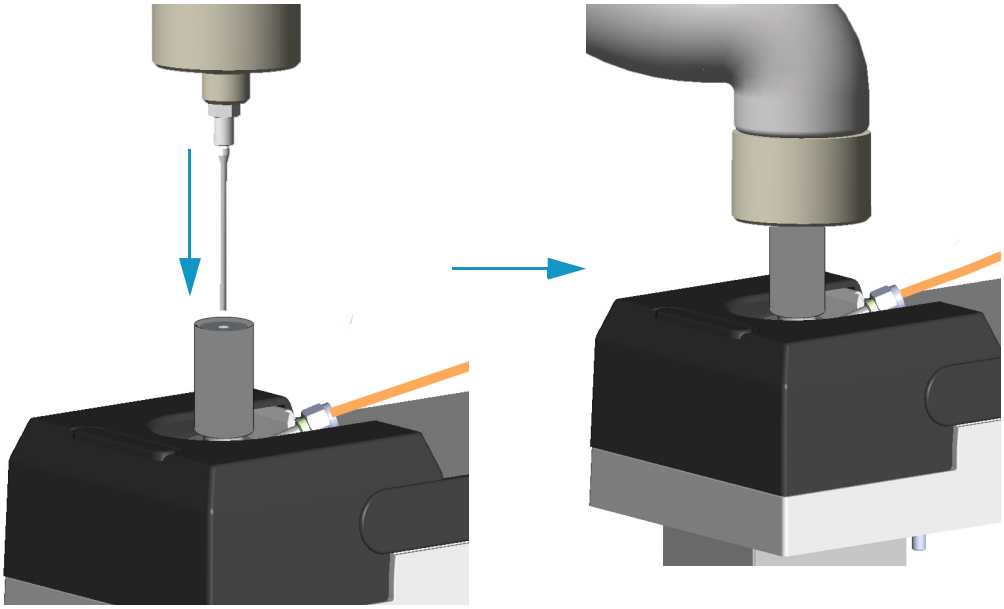

16. Cut the piece of column end previously connected to the injector.
    a. Use a scoring wafer to score and break the column in order to remove the current ferrule and the nut.

17. Connect the column to the injector.
    a. Wipe about 100 mm (4 in.) of the column with a tissue soaked in methanol.
    b. Insert the column through the injector retaining nut and the proper ferrule (open end up). Wipe the column again with a tissue soaked in methanol.
    c. Use a scoring wafer to score and break the column about 1 cm (0.4 in.) from the end. Use a magnifying glass to check for an even, flat cut. Repeat if necessary.

    Tip Slide a notched septum on the column before the injector retaining nut to make it easier to measure the proper distance between the nut and the end of the column.

    d. Position the column so that the end of the column extends the proper distance of **30 mm** above the end of the ferrule.
    e. Insert the notched septum on the column to hold the retaining nut at this position. Thread the retaining nut into the injector but do not tighten.

f. Adjust the column position so that the septum contact the bottom of the retaining nut.

g. Finger-tighten the retaining nut until it starts to grip the column plus a quarter turn.

h. Remove the notched septum from the column.

18. Open the gas supplies.

19. Power on the GC.

    a. Plug the power cable into the AC Input connector on the back of the GC and into the wall outlet.

    b. Flip out the power switch (breaker) to the position I.

20. Setup the GC.

    a. Set the oven and injector temperature to 50 °C.

    b. Use the column-flowmeter connector to verify that there is flow through the column. If you do not have a flowmeter, dip the column outlet in a small vial of methanol. Bubbles indicate there is flow through the column. If there is no flow, check that the carrier gas is on, the GC inlet is pressurized, and the column is not plugged. If there is still no flow, consult the section **Analytical Troubleshooting** in the *TRACE 1300/TRACE 1310 User Guide*, or contact the Technical Support.

    c. Allow the column to purge for few minutes.

21. Perform a column leak check.

22. Calibrate the carrier gas flow (column evaluation).

    a. Select the column and input the physical characteristics of the column.

    b. If a pre-/post-column is present, set the length and nominal internal diameter of the pre-/post-column in the same valid ranges for the column. The following two lines are added to the menu.

    c. According to the physical characteristics of the column, the system calculates and displays the relevant Column K-factor.

    > **Note** For the most reproducible results, you should conduct a more detailed column evaluation. However, the following steps, while recommended, are not required.

    d. Start column evaluation. At the end of the routine, a message will indicate that evaluation was successful.

    e. Expect a K-factor of approximately 0.7 – 0.9 for a 15 m, 0.25 mm ID column (1.3 – 2.0 for a 30 m, 0.25 mm ID column). If the column does not report a K-factor within this range or within 0.1 units of the previous stored value, check for a leak or broken column using the leak detector. The K-factor is a measured resistance for the column. A K-factor that is too low may indicate a leak in the system, while a K-factor that is too high may indicate a blockage.

23. Disconnect the column-flowmeter.
    a. Disconnect the column from the column-flowmeter connector.
    b. Remove the clear plastic component, including its fittings, from the oven and set it aside.
    c. Close the GC door.
24. Condition the column.

    The column must be conditioned before inserting it into the detector.

    Column conditioning consists of passing a carrier gas flow through the column heated at a programmed temperatures as described in the *column manufacturer's instructions*.

    In case the column does not have any column conditioning instructions, perform the column conditioning by setting a final temperature up to 10 °C - 20 °C below its recommended maximum temperature.

CAUTION When performing column conditioning, the column should be connected only to the injector leaving the column outlet disconnected to avoid the possibility of contamination of the detector.
Do not use hydrogen as the carrier for conditioning! It could vent into the oven and present an explosion hazard.

    a. Run the temperature program that is recommended by the manufacturer.

INSTRUMENT DAMAGE: Never exceed the column manufacturer's maximum operating temperature.

25. Connect the column to the detector inside the GC.
    a. Lower the oven temperature to 30 °C and allow it to cool.

WARNING-BURN HAZARD: The injector, detector, oven, and transfer line may be hot. Allow them to cool to room temperature before touching them.

    b. Unwind the column enough to easily connect its ends to the injector and the detector..

    Note Wear clean, lint- and powder-free gloves when you handle the column and injector ferrule.

    c. Wipe about 100 mm (4 in.) of the column with a tissue soaked in methanol.
    d. Use a scoring wafer to score and break the column outlet about 2.5cm (1 in.) from the end. Use a magnifying glass to check for an even, flat cut. Repeat if necessary.

e. Insert the column through the proper detector retaining nut and ferrule (open end up). Wipe the column again with a tissue soaked in methanol.

> **Tip** Slide a notched septum on the column before the detector retaining nut to make it easier to measure the proper distance between the bottom nut and end of the column.

f. Position the column so that the end of the column extends the proper distance above the end of the ferrule as reported in Table 14.
For **PDD** see the instruction described at the step g on page 103.

Table 14. Column Insertion Depth For FID, NPD, TCD, ECD, FPD, and PDD Detectors

FID	NPD	TCD	ECD	FPD	PDD
Insert the column as far as goes and withdrawn about 2mm			23 mm	125 mm	136 mm

i. For **FID**, **NPD**, **TCD**, insert the column into the detector, paying attention to not force it further. Finger-tighten the retaining nut, then withdraw the column 2-3 mm. Tighten the retaining nut an additional a quarter turn.

ii. For **ECD** and **FPD**, insert the notched septum on the column to hold the retaining nut in this position. Thread the retaining nut into the detector but do not tighten.
Finger-tighten the retaining nut until it starts to grip the column plus a quarter turn. Remove the notched septum from the column.

g. For **PDD** the column must penetrate **136 mm** inside the capillary column adapter.

h. End of the column installation.

i. Close the front door of the GC.

Upgrade Equipment

This chapter describes how to upgrade the TriPlus 300 Headspace sampling system with the available optional devices.

Contents

- Chiller
- Barcode Reader

Chiller

The chiller is an optional accessory of the Autosampler Unit for cooling all the 120 vials on the tray through a refrigerant coil installed underneath the plate. See Figure 92.

Figure 92. Chiller

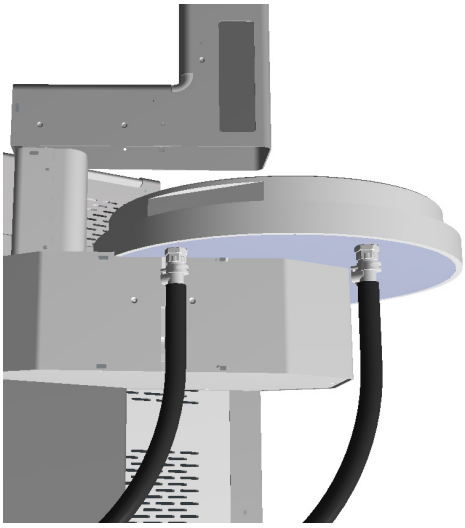

The chiller requires an external recirculating cooling pump. All the control parameters must be set on this device. Refer to the chiller pump manual.

The difference between the temperature of the liquid inside the coil and the vials on the tray is about 10 °C, so the chiller temperatures values must be 10 degrees lower then the vial temperature required.

IMPORTANT **Be careful!!!**

If the relative humidity in the air is high, it could create condensation on the tube and under the plate. In the event of very low temperatures ice could be formed, and you must manually remove the ice.

On the table below find the assessment of the maximum humidity forming respect to ambient temperature wherein the Chiller can work without forming condensation.

T [°C]	φ max
40	8%
35	10%
30	13%
25	18%
20	25%
15	33%
10	46%

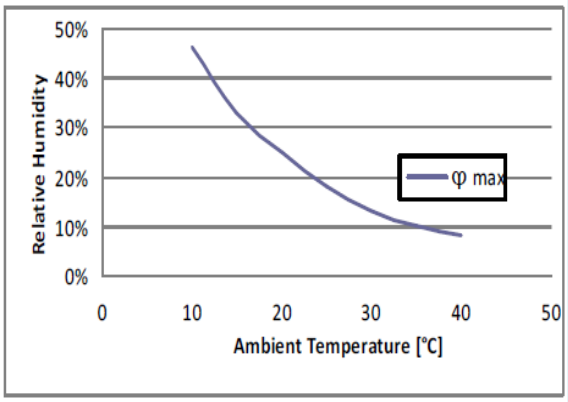

❖ To install the chiller

The installation of the chiller is very easy: under of the chiller plate you find two fittings in order to connect the IN and OUT silicon tubes of the refrigerant circuit.
The two tubes are covered with insulating material.

1. Connect the tubes as shown in Figure 93.

Figure 93. Tubes Connection

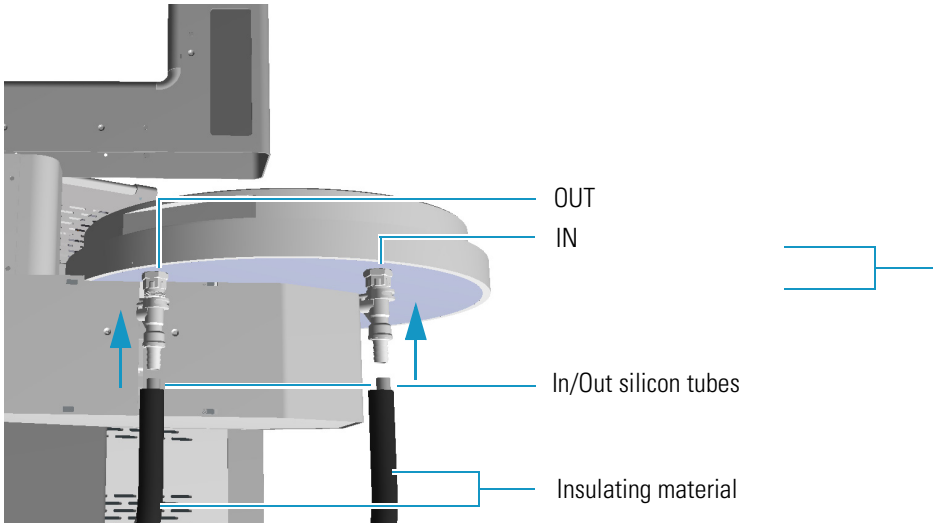

- **IN** is the inlet of refrigerant liquid.
- **OUT** is the outlet of refrigerant liquid.

Barcode Reader

The Barcode Reader is an optional accessory of the autosampler tray that reads the labels attached to the sample vials for positive identification of the samples.

The Barcode reader supports the checksums and the following fonts:

- Code 128
- 3 of 9
- Matrix 2 of 5
- Standard 2 of 5
- Interleaved 2 of 5
- UPC-A
- EAN/JAN 13
- EAN/JAN 8
- UPC-E
- QR Code (2D)

About the Barcode Reader

A barcode is an optical machine-readable representation of data relative to the object to which is attached.

The first use of barcodes was to label railroad cars, but they were not commercially successful until they were used to automate supermarket checkout systems.

Originally barcodes represented data by varying the widths and spacings of parallel lines (linear or one-dimensional), later they evolved into rectangles, dots, hexagons, and other geometric patterns in two dimension (2D).

Barcode Reader Description

The barcode reader consists of three main parts. See Figure 94.

Figure 94. Barcode Reader

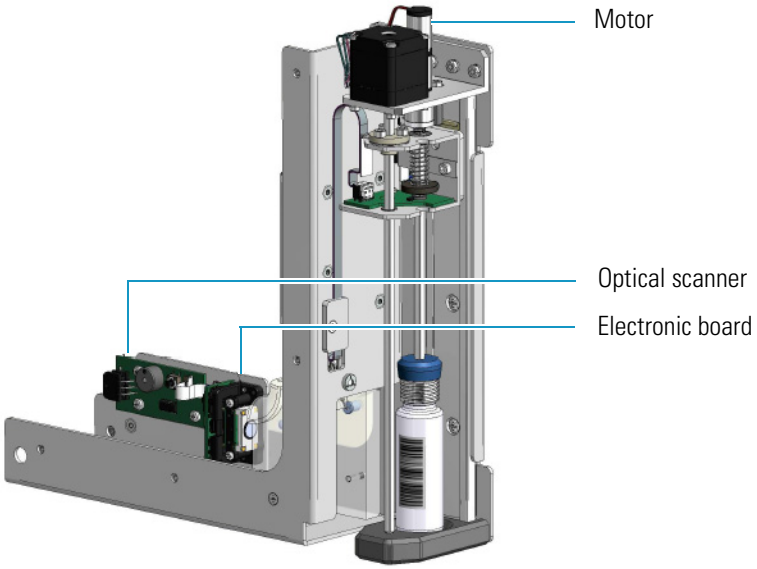

- An optical scanner positioned inside the horizontal arm for enabling the reading of the barcode.
- An electronic board connected to the optical scanner by a flat cable.
- A motor rotating the vial for the complete reading of the barcode.

User Information

To enable the barcode reader select **Menu > Setup > AS**. Activate the barcode reader by selecting **barcode ON**. See Figure 94.

Figure 95. Barcode Reader Configuration

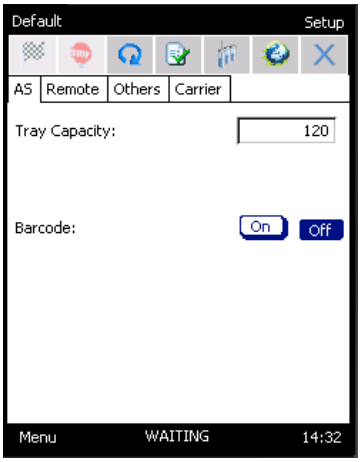

In order to provide a logical control over a reading error select an action in **Method Sequence Action** (**Menu > Method Actions**) from the list:

- **Ignore** — The autosampler continues the processing of the sequence.
- **Skip** — The current vial and its possible repetitions are skipped, and the next vial of the sequence is processed. If the vial is already in the oven it will be returned to the tray.
- **Abort** — Aborts the processing of the current vial and the sequence. The vials inside the carousel are returned to the tray.

Label Positioning

Figure 96 and Figure 97 show how to place the labels to avoid any reading errors.

Figure 96. Label positioning for One-dimensional barcode

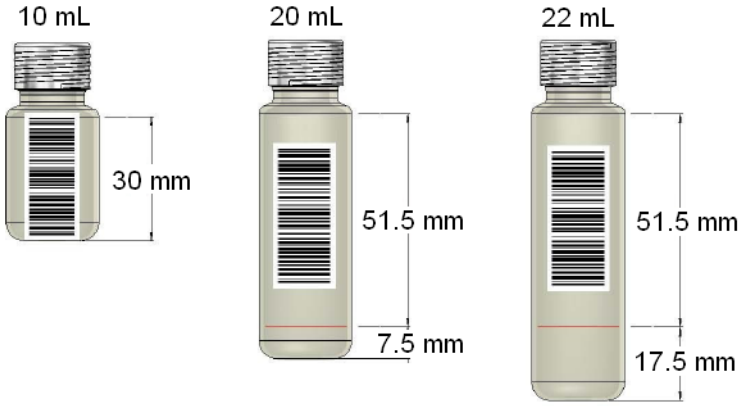
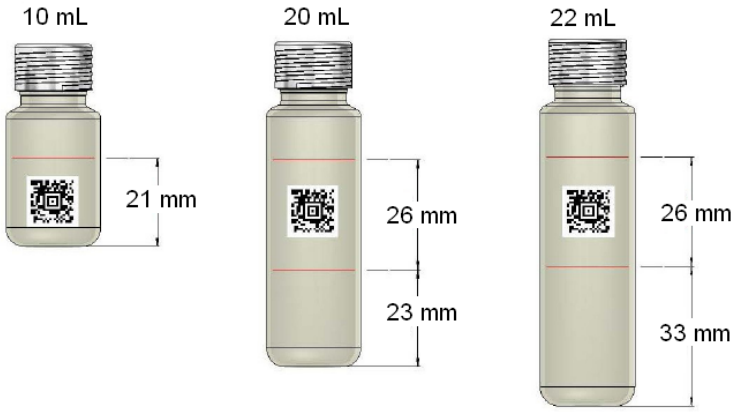
Figure 97. Label positioning for Two-dimensional barcode